

Lucent Technologies
Bell Labs Innovations

Lucent Brown Bag eLunch

Access Networks

William E. Engler
Vice President and General Manager
Access Networks Product Group

29 Sep 03

Access Technologies

Lucent Technologies
Bell Labs Innovations

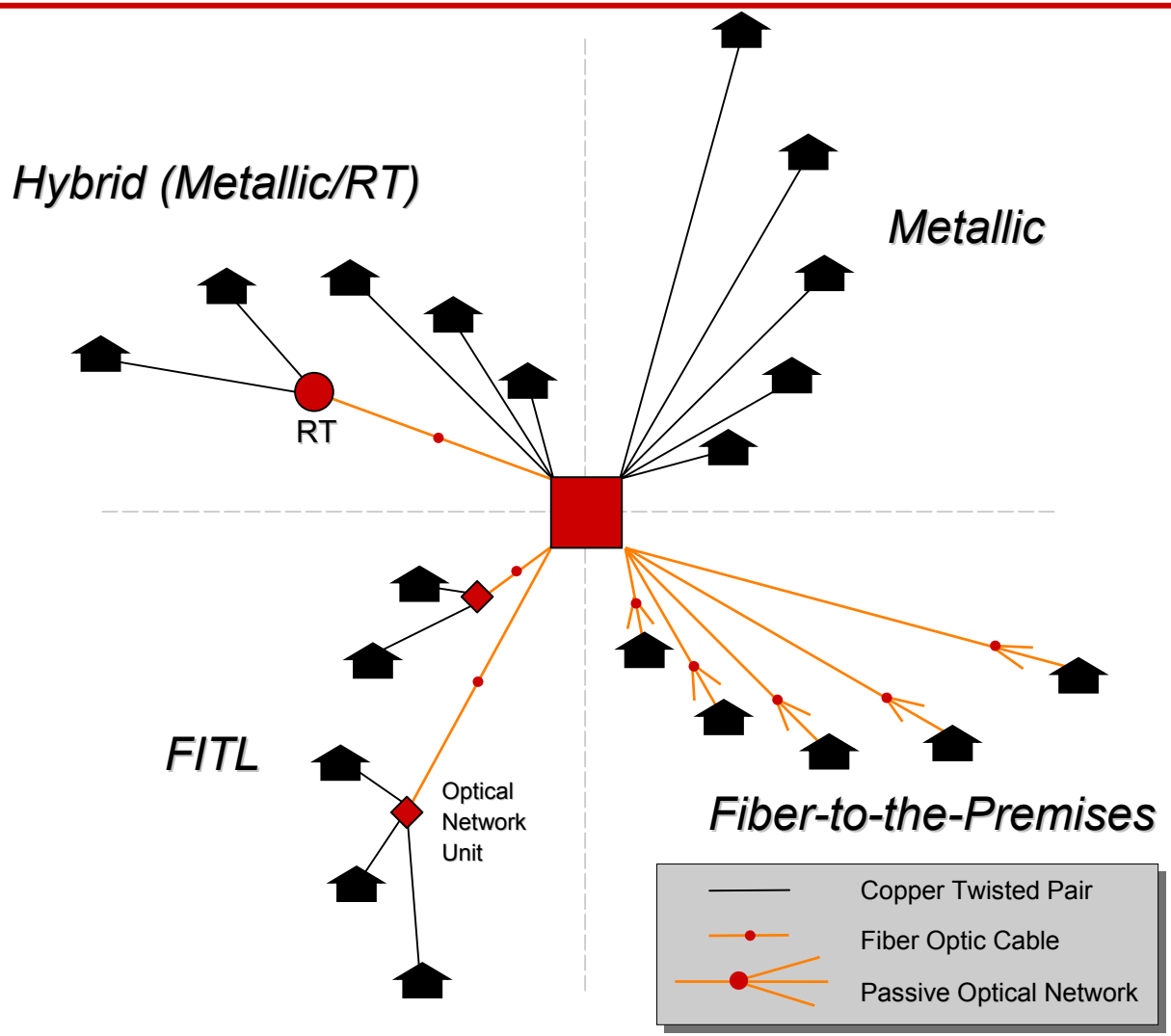

© Lucent Technologies 2003 - All Rights Reserved

Worldwide Broadband Subscribers

Lucent Technologies
Bell Labs Innovations

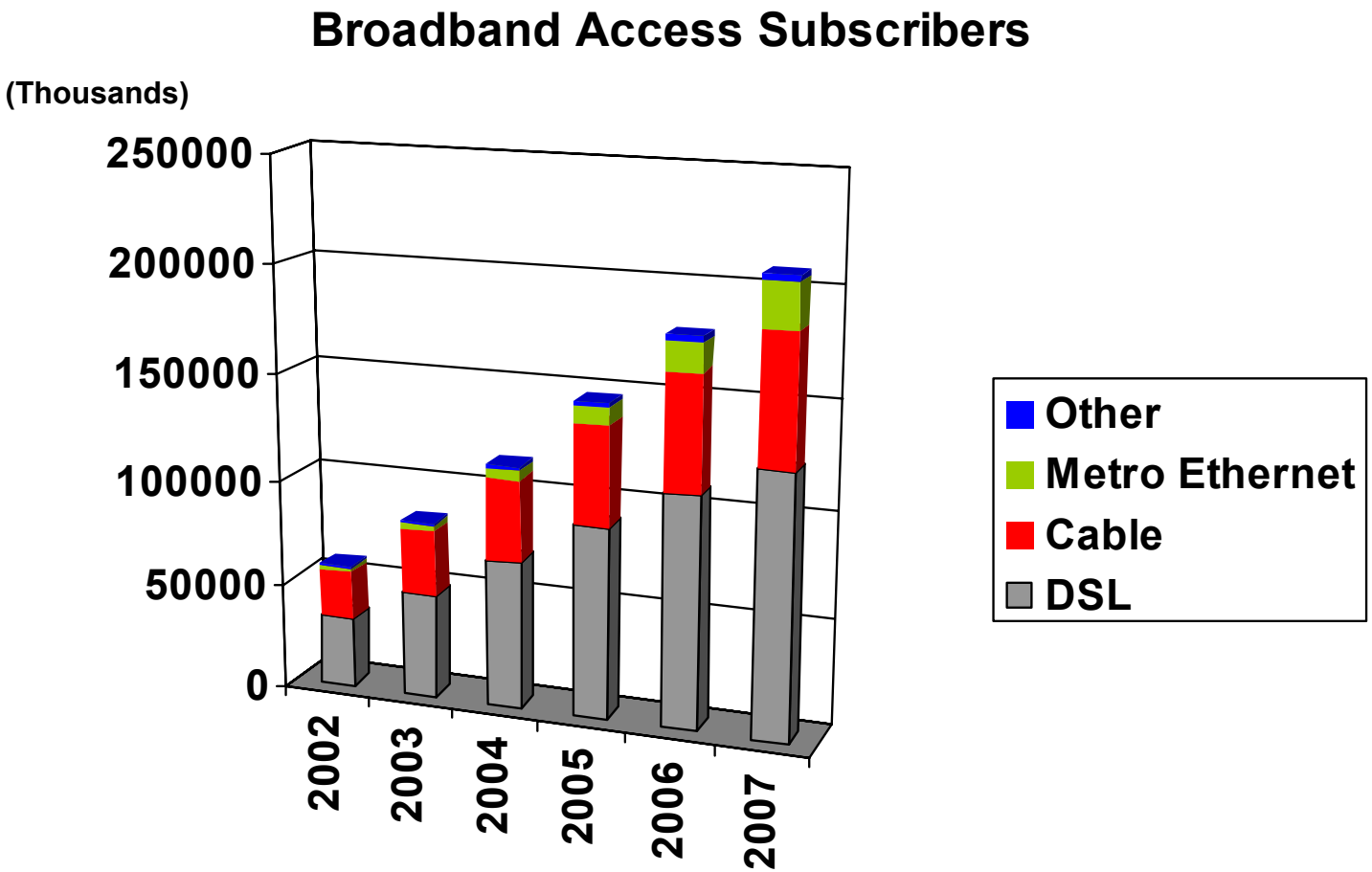

Source: IDC, August 2003

© Lucent Technologies 2003 - All Rights Reserved

Progression Toward Value-Added Services

Lucent Technologies
Bell Labs Innovations

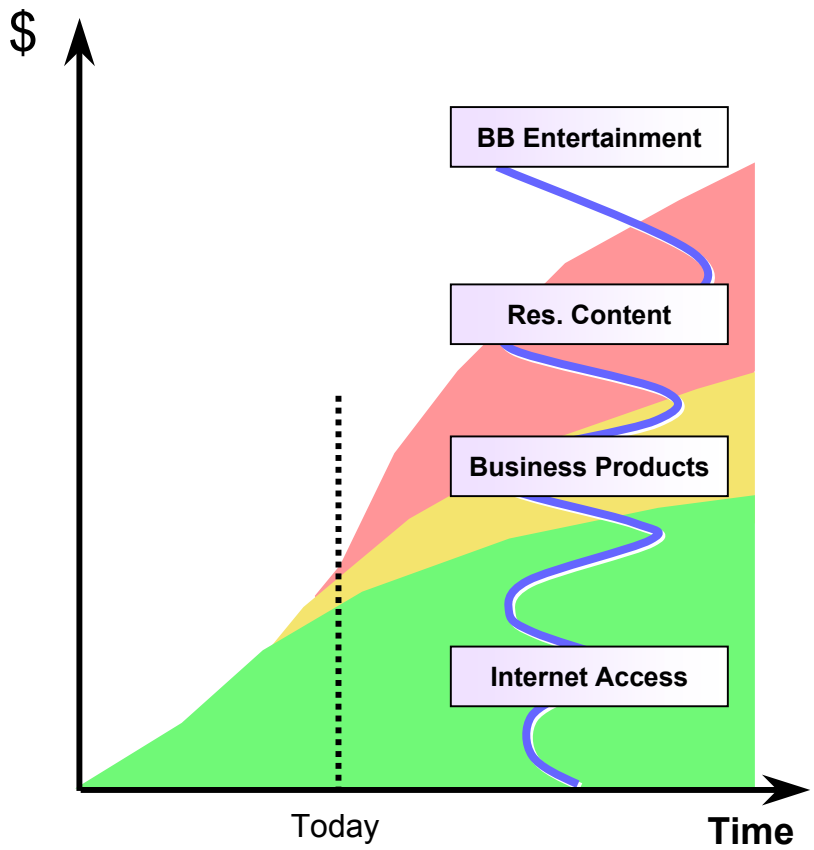

Leverage the existing network infrastructure to achieve additional revenue and minimize payback time

© Lucent Technologies 2003 - All Rights Reserved

xDSL Progression

Lucent Technologies
Bell Labs Innovations

Data Rates

ADSL

- Downstream: up to 8 Mbit/s
- Upstream: up to 1 Mbit/s

ADSL2+

- Downstream: up to 15/16 Mbit/s
- Upstream: up to 1 Mbit/s
- Bonded ADSL2+ doubles rates

DSLAM Network Connection

Can be: nx100/1000BaseT,
nxOCn, nxSTMn, POS/ATM

SHDSL

- Downstream/Upstream: up to 2.3 Mbit/s
- 4-wire SHDSL doubles rates

VDSL (asymmetric)

- Downstream: up to 52 Mbit/s
- Upstream: up to 26 Mbit/s
- Bonded VDSL doubles rates

VDSL (symmetric)

- Downstream/upstream: up to 26 Mbit/s
- Bonded VDSL doubles rates

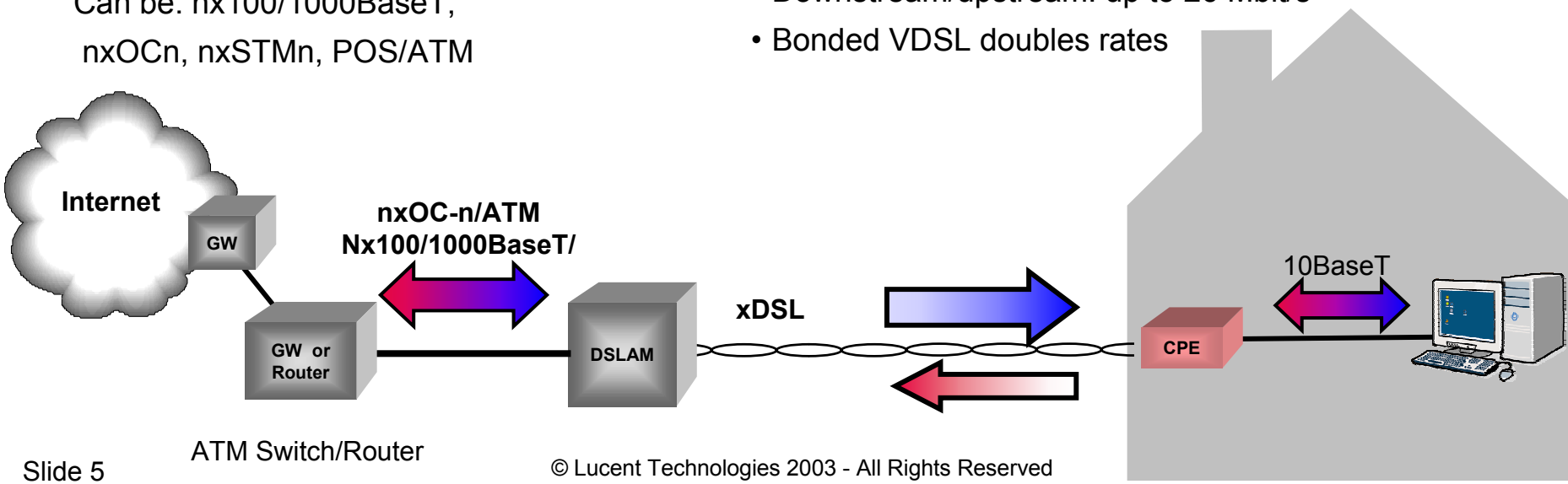

© Lucent Technologies 2003 - All Rights Reserved

xDSL Progression

Lucent Technologies
Bell Labs Innovations

Enablers → What's next?

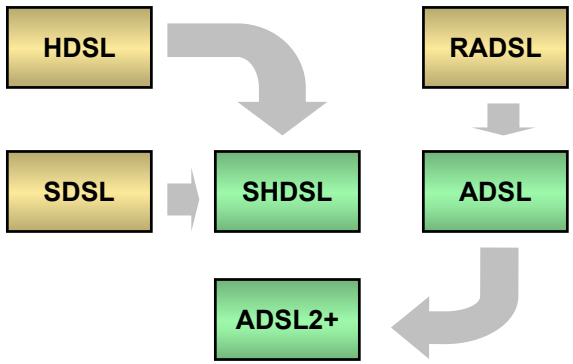

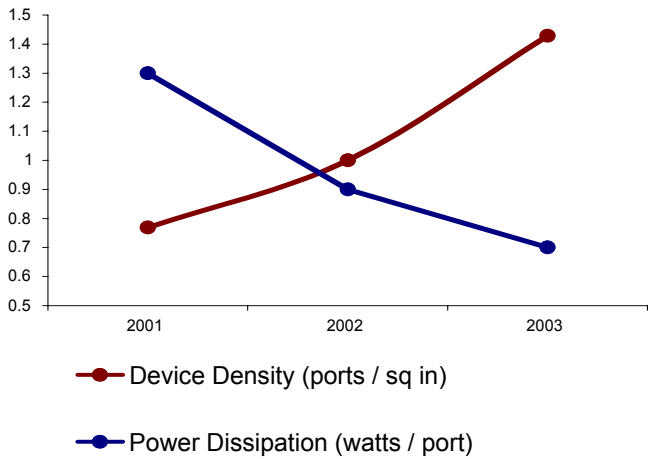

ADSL2+, VDSL

Denser, smaller remotes

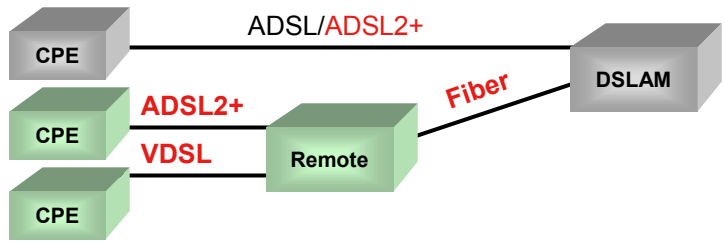

Additional integration of advanced capabilities

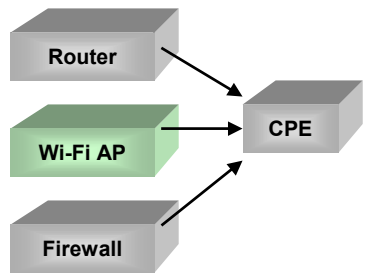

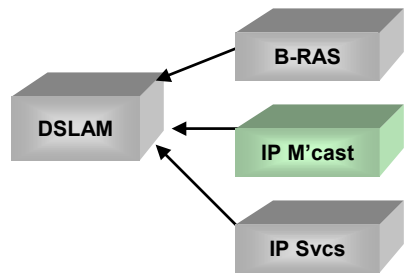

© Lucent Technologies 2003 - All Rights Reserved

ATM DSLAM Deployment

Lucent Technologies
Bell Labs Innovations

The Opportunity

- IP functions require additional network element(s)
- Provisioning and traffic engineering of ATM PVCs is time-consuming
- Direct IP over Ethernet connection offers advantages

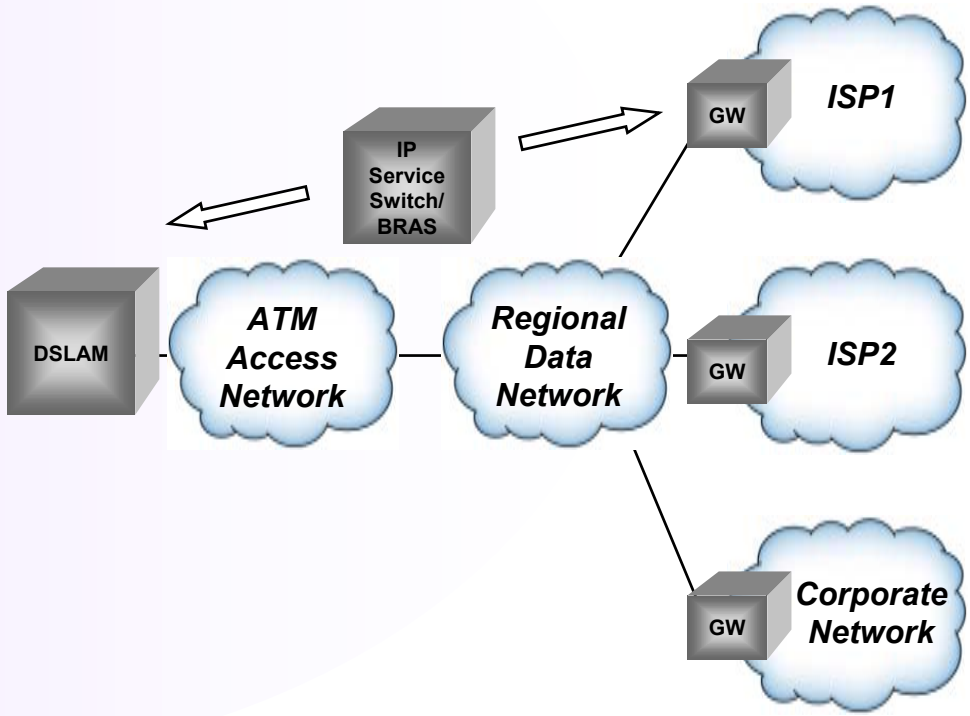

© Lucent Technologies 2003 - All Rights Reserved

IP DSLAM Advantages

Lucent Technologies
Bell Labs Innovations

The Enabling Solution:
Integrate IP capability into the DSLAM

- Reduces the number of network elements required
- Provisioning and traffic engineering is simplified
- Direct IP over Ethernet connection offers advantages
  - More BW at a lower cost
  - Simplified provisioning and reduced operational costs
  - Migration path to a converged IP backbone

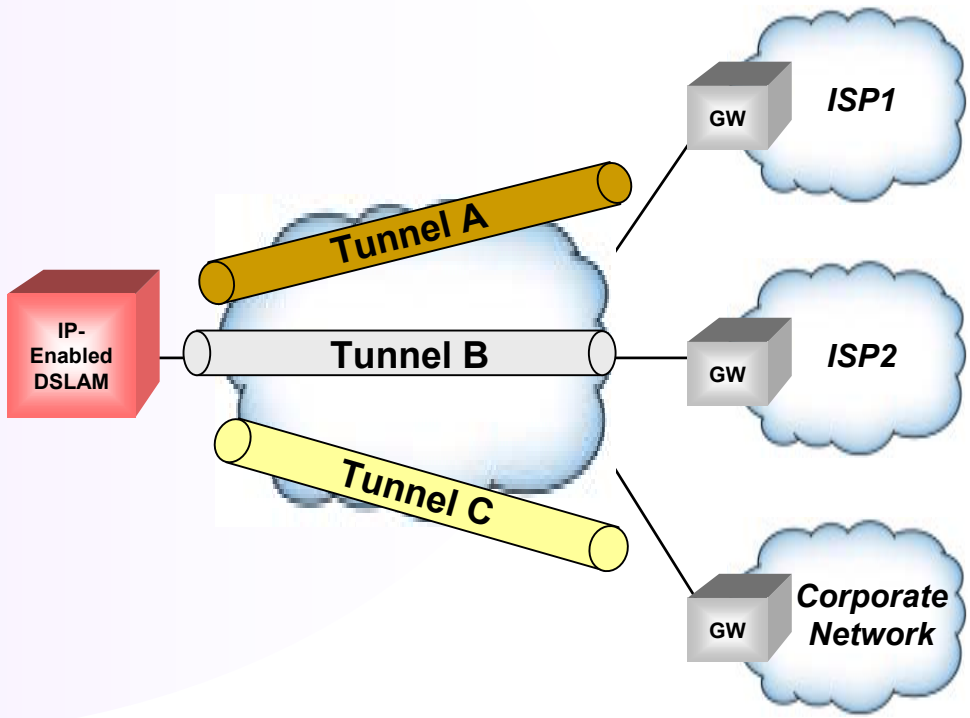

© Lucent Technologies 2003 - All Rights Reserved

Lucent's Stinger® Solutions

Lucent Technologies
Bell Labs Innovations









Stinger FS, FS+

- Highest Density DSLAM in the industry since 1999
- Unmatched features and performance
- 1,008 ports per FS+

Stinger LS

- MTU/MDU
- Shallow depth (10")
- Two models (19" and 23")
- 504 ports per LS

Stinger RT

- Outdoor cabinet deployments
- Environmentally-hardened versions of the two LS models
- 504 ports per RT

Stinger MRT

- 36 & 48 ports ADSL
- 36 ports SHDSL
- Rural deployments
- Small Offices
- MTU/MDU
- 23" and 19" models

© Lucent Technologies 2003 - All Rights Reserved

The Stinger Portfolio Continues to Grow

Lucent Technologies
Bell Labs Innovations



Stinger CR

- Cost effective reach beyond CO
- 15Km reach
- Standalone/Hosted
- 144 xDSL subscribers
- Local or remote power



V16 IP DSLAM

- 16 Subscriber ports
- 2 Uplinks: 100BT or GE
- Integrated POTS/ISDN splitters
- Subtend 8 switches
- Full L2 IP features

Coming soon. . .

New MRT

New WiFi AP

© Lucent Technologies 2003 - All Rights Reserved

Circuit-to-Packet Forecast

Lucent Technologies
Bell Labs Innovations

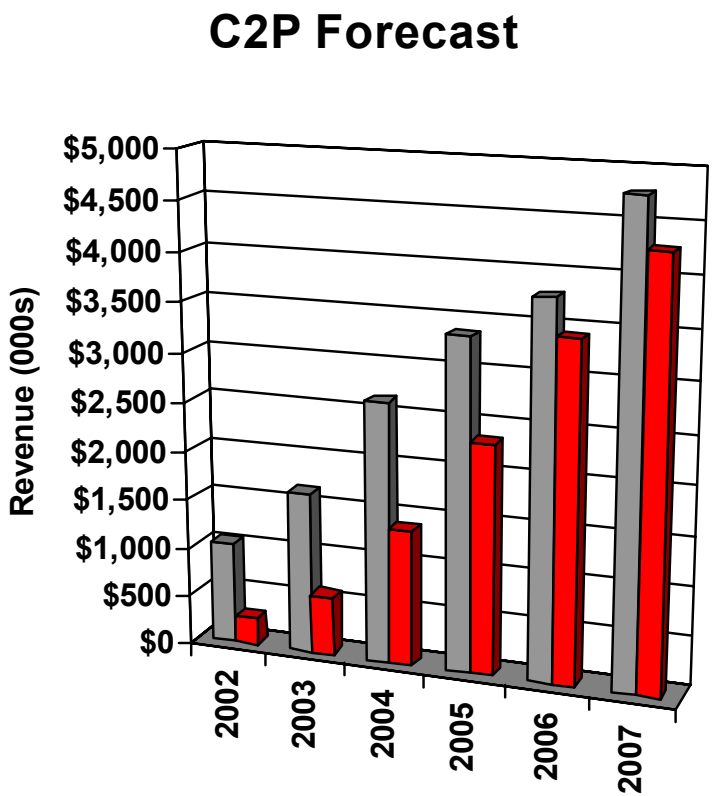

	2002	2003	2004	2005	2006	2007
Class-4 C2P	1036	1643	2643	3354	3780	4766
Class-5 C2P	285	602	1380	2335	3416	4278

Source: RHK, April 2003

© Lucent Technologies 2003 - All Rights Reserved

C2P Target Architecture

Lucent Technologies
Bell Labs Innovations

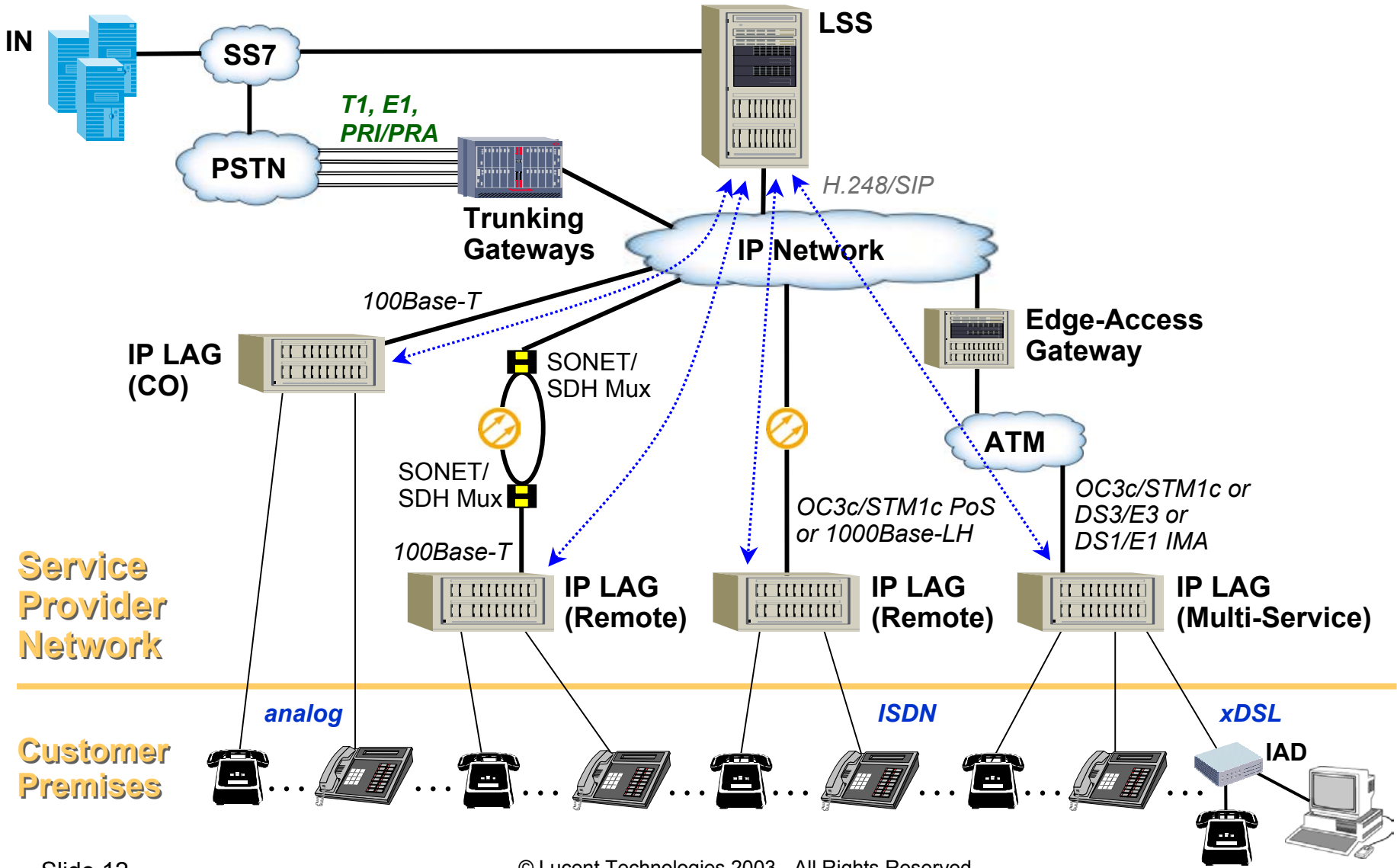

© Lucent Technologies 2003 - All Rights Reserved

Lucent's AnyMedia® Solutions

Lucent Technologies
Bell Labs Innovations

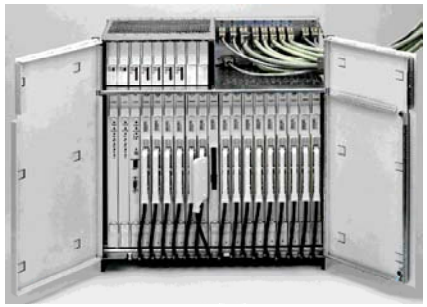

AnyMedia® FAST/V5DLC

- Up to 512 lines
- Traditional access applications
- Full-featured conventional voice and high speed packet data services
- Stand-alone

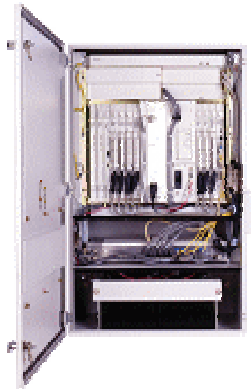

AnyMedia® 800

- Up to 256 lines
- MDU/MTU access applications
- Full-featured conventional voice and high speed packet data services
- Stand-alone



AnyMedia® ONU

- Up to 96 lines
- FITL applications
- Full-featured conventional voice and high speed packet data services
- Hosted by upstream AMAS system



AnyMedia® LAG

- Up to 1376 lines
- Switch modernization applications

© Lucent Technologies 2003 - All Rights Reserved

Lucent's Universal Gateway Solutions

Lucent Technologies
Bell Labs Innovations

Any Service, Any Port, Any Time









MAX TNT®

- Up to 720 Universal Ports
- Industry's largest installed based (over 15M port)
- Homologated in over 40 countries
- Redundant load sharing power supplies

APX™ 1000

- Up to 720 Universal Ports
- Small footprint, 3RU high
- Low power consumption
- Simultaneous AC&DC power supply feeds for reliability

APX™ 8000

- Up to 2688 Universal Ports
- Industry's most feature-rich and Internet-proven software
- NEBS Level 3 compliant
- Uniform capacity for consistent application performance and density

APX™ 8100

- Up to 8064 Universal Ports
- Fully redundant, fault-tolerant design
- Billable calls not dropped on fail-over
- Stratum 3 Clocking for improved system synchronization and timing

© Lucent Technologies 2003 - All Rights Reserved

Fiber-to-the-Premises

Lucent Technologies
Bell Labs Innovations



Many options exist for FTTP

Lucent is presently involved in RBOC consortium opportunity

Bell Labs continues to evaluate FTTP technologies. Ongoing Bell Labs projects include:

- *Switched Point-to-Point Ethernet FTTH*
- *Ethernet Passive Optical Network (E-PON)*
- *ITU G.984 GPON*
- *Wave Division Multiplexing Passive Optical Network (WDM-PON)*

© Lucent Technologies 2003 - All Rights Reserved



Lucent Technologies
Bell Labs Innovations

Lucent Brown Bag eLunch

Access Networks: Q&A

William E. Engler
Vice President and General Manager
Access Networks Product Group

29 Sep 03