Wireline and Wireless Edge Networks

Convergence Where It Makes Cents



Joe Merritt

AVP, Business Development

PacketStar ® PSAX Multiservice Media Gateways

Lucent Technologies
Bell Labs Innovations

Agenda

Introduction to PSAX

The Driving Forces Behind Network Convergence

Wireless and Wireline Trends

- Market trends
- Access/Edge Network Evolution

Evolving Wireline and Wireless Networks with PSAX

- Key applications

Wireline and Wireless Customer Networks

- PSAX powered customer networks

PacketStar® PSAX MultiService Media Gateways

Multiple Voice and Data Services in a cost-effective package



- **Carrier Class Reliability**
- **Scaleable Solutions**
- **Reduced Complexity**
- **Rapid Service Introduction**
- **Low Cost of Ownership**

Voice Services

Voice VPNs, PBX Networking, Voice/Data Service Integration, IMT (Inter-Machine Trunk) Transport, and Media Gateway applications. VoDL Gateway

Data Services

L2 Data VPNs, Transparent LAN, Frame Relay UNI Services, Private Line, Ethernet VPNs

Multimedia Services

Video Networking, Distance Learning, Collaborative Computing applications

Network Services and Transport

Mobility backhaul, ATM Network Infrastructure, Network & Element Management

- **45,000 PacketStar™ chassis sold globally**
- **Over 40 user modules available**
- **Interface speeds from 9600 baud to OC-12c/STM-4**
- **Switching fabric from 600Mbs to 4.8 Gbps**

The Driving Force Behind Network Convergence

Subscribers want access to their communications services from many places

- Home, office, on-the-go
- Mobility isn't just wireless anymore!

From many devices

- PC, PDA, telephone, mobile phone

Without having separate accounts

- Single sign-on, common contacts
- Access-aware information delivery

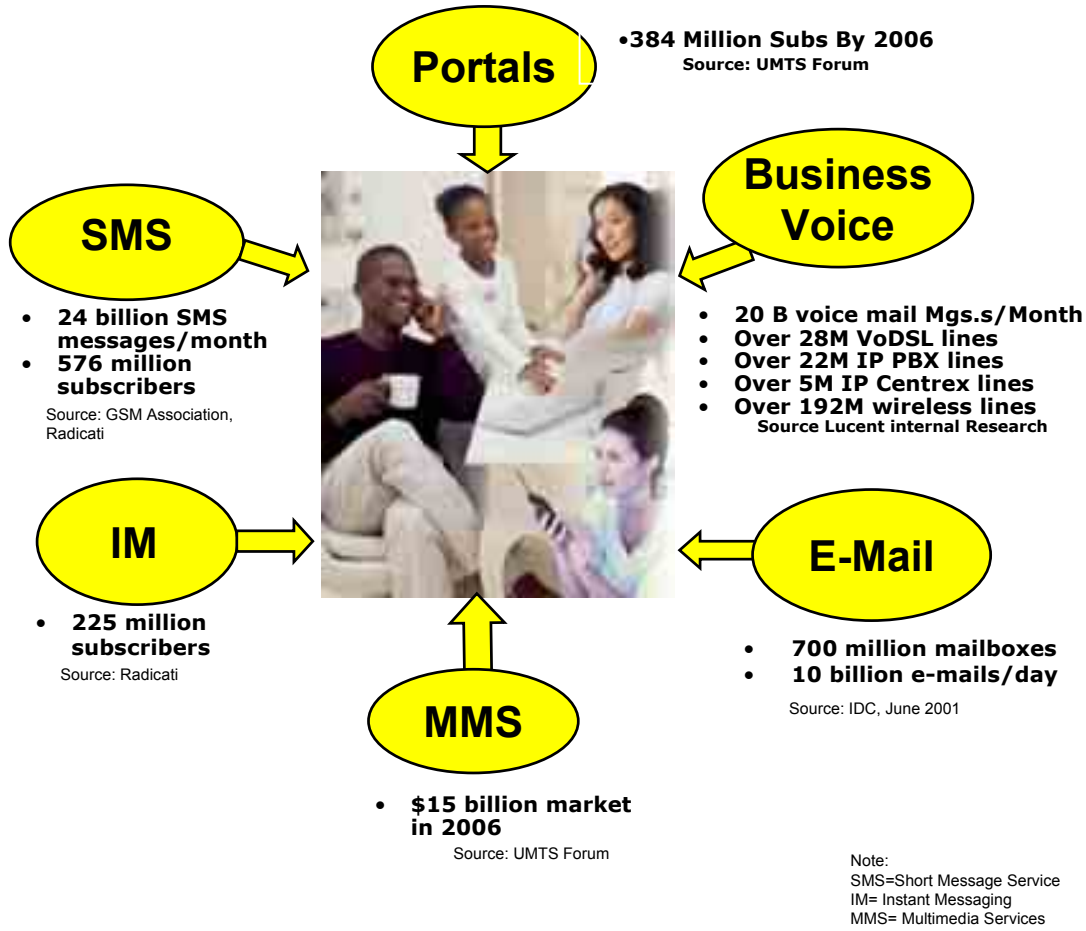

Subscriber Needs Drive Next-Gen Wireline/Wireless Convergence

Wireline Edge Market and Network Trends

Market Trends

- The evolving services mix:
  - DSL services rollout increasing momentum - Feb ’03 FCC UNE-P
  - More efficient Multiservice aggregation for IP/MPLS transport networks
  - WiFi technology developments - increased demand for low cost IP aggregation
  - Increased demand for voice over packet - convergence proof point
- Wireline carrier pricing pressures from cable and wireless providers
- Pressure to reduce OpEx - improve basic economics for bandwidth, cost per port, multiservice aggregation of ATM, FR, IP, and PPP

Access/ Edge Network Trends

- Easily integrate new IP-based services; interwork ATM, FR and Ethernet; add bandwidth management, QoS and SLAs
  - IP Aggregation - ATM, Frame Relay, HDLC, PPP, Ethernet
  - L2 Transport and Aggregation for Frame Relay, ATM, and PPP
  - Ethernet VPN services as low cost IP access

Mobility Edge Market and Network Trends

Market Trends

- Mobile transport networks primarily TDM/ primitive frame (HDLC) based. Packet networks limited to data communications network only
- Mobile standards for GPRS, CDMA and UMTS moving to cell / packet based
- High pressure on mobile operators to be cost efficient and competitive in order to reduce leased facilities costs

Access / Edge Network Trends

- Multi-protocol (TDM, FR, HDLC, ATM, IMA, IP, and MLPPP)
- Multi-service (1G, 2G, 2.5G, 3G), future proof CapEx
- High availability services with reliable elements with alternate routing
- Constrained bandwidth drives the need for cost-effective QoS

Evolving Wireline Networks with PSAX

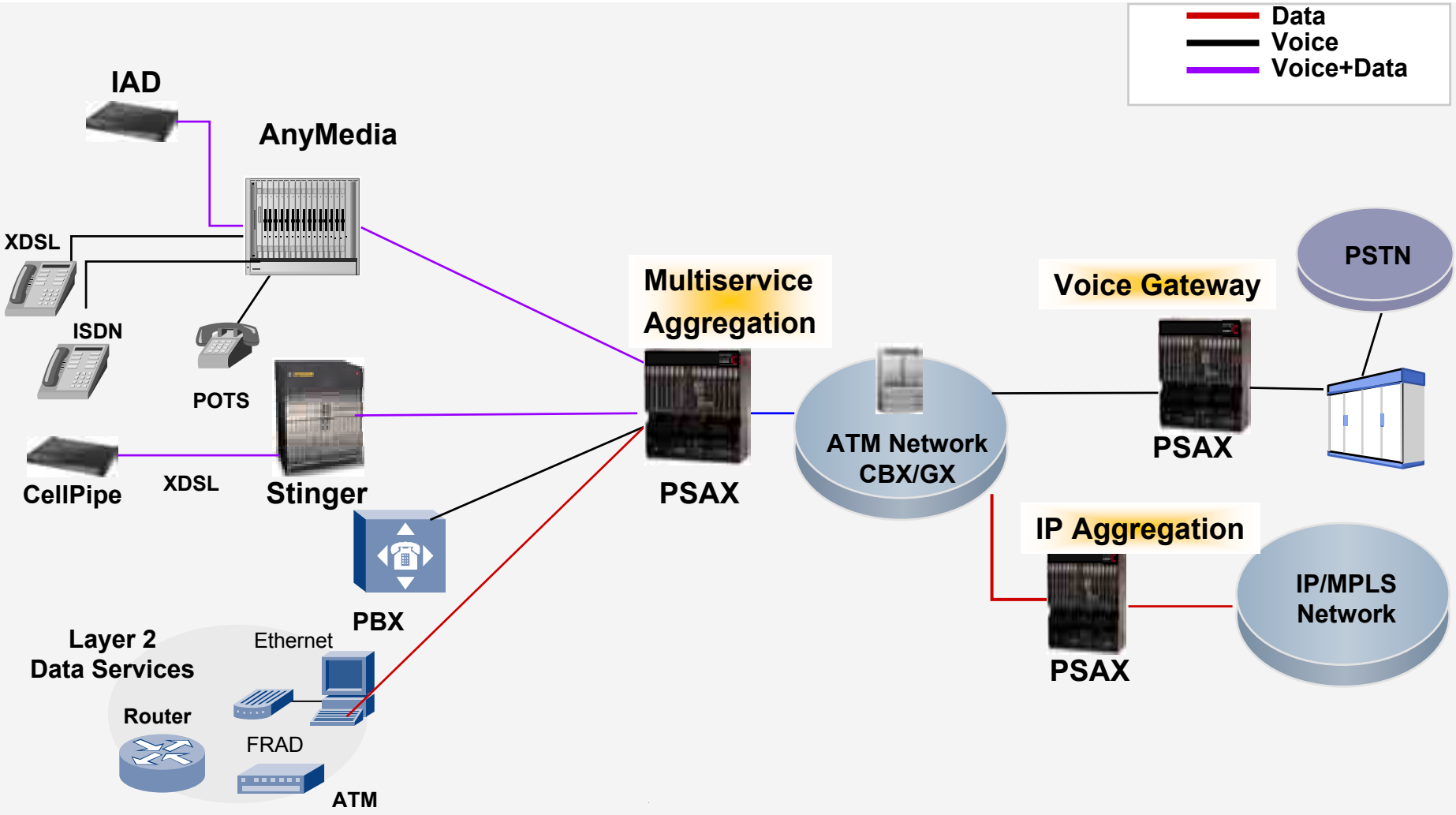

PSAX Enabling Voice, Video, Data Network Convergence

Evolving Mobile Networks with PSAX

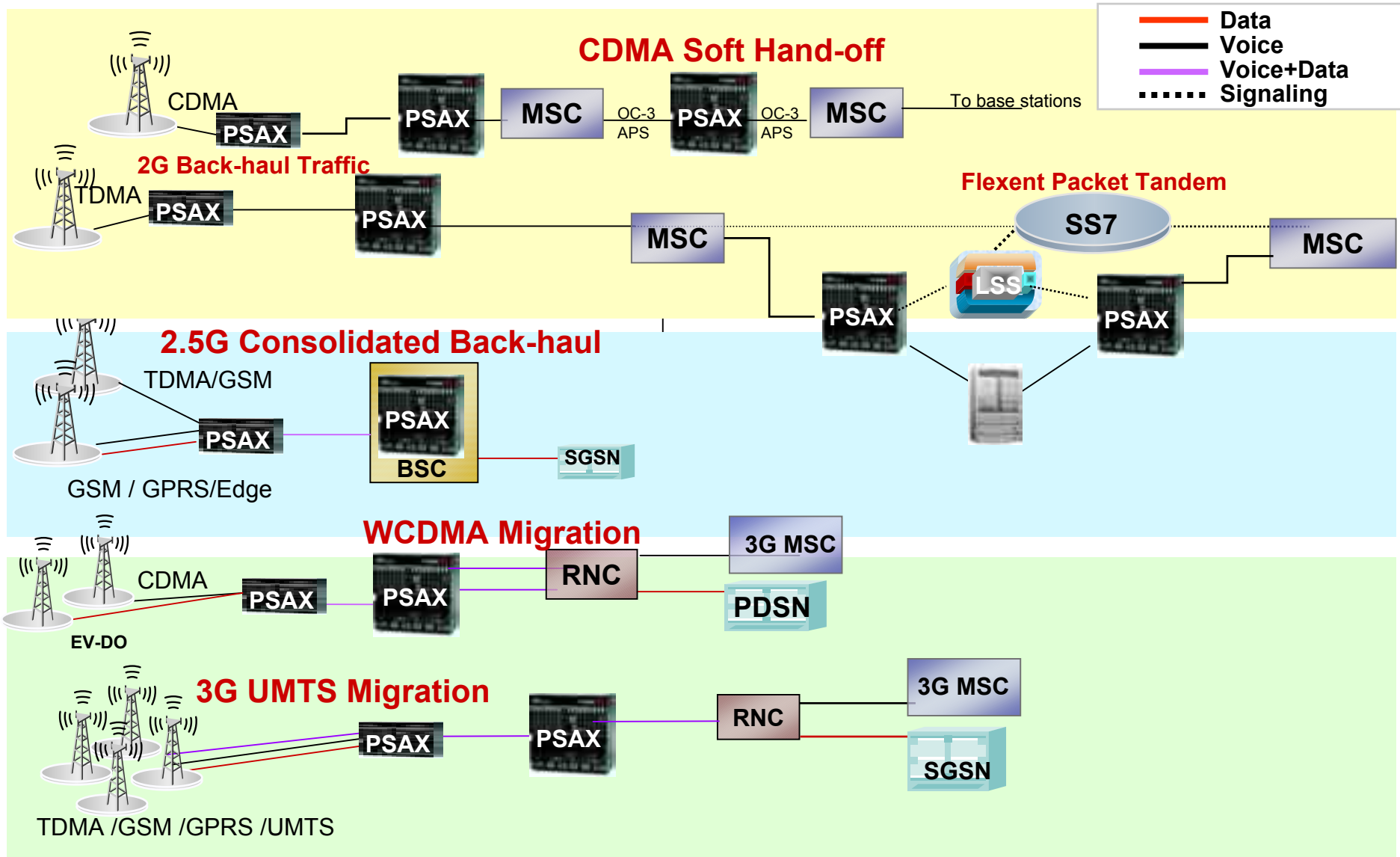

Accelerate™ Wireless / Wireline Convergence with PSAX

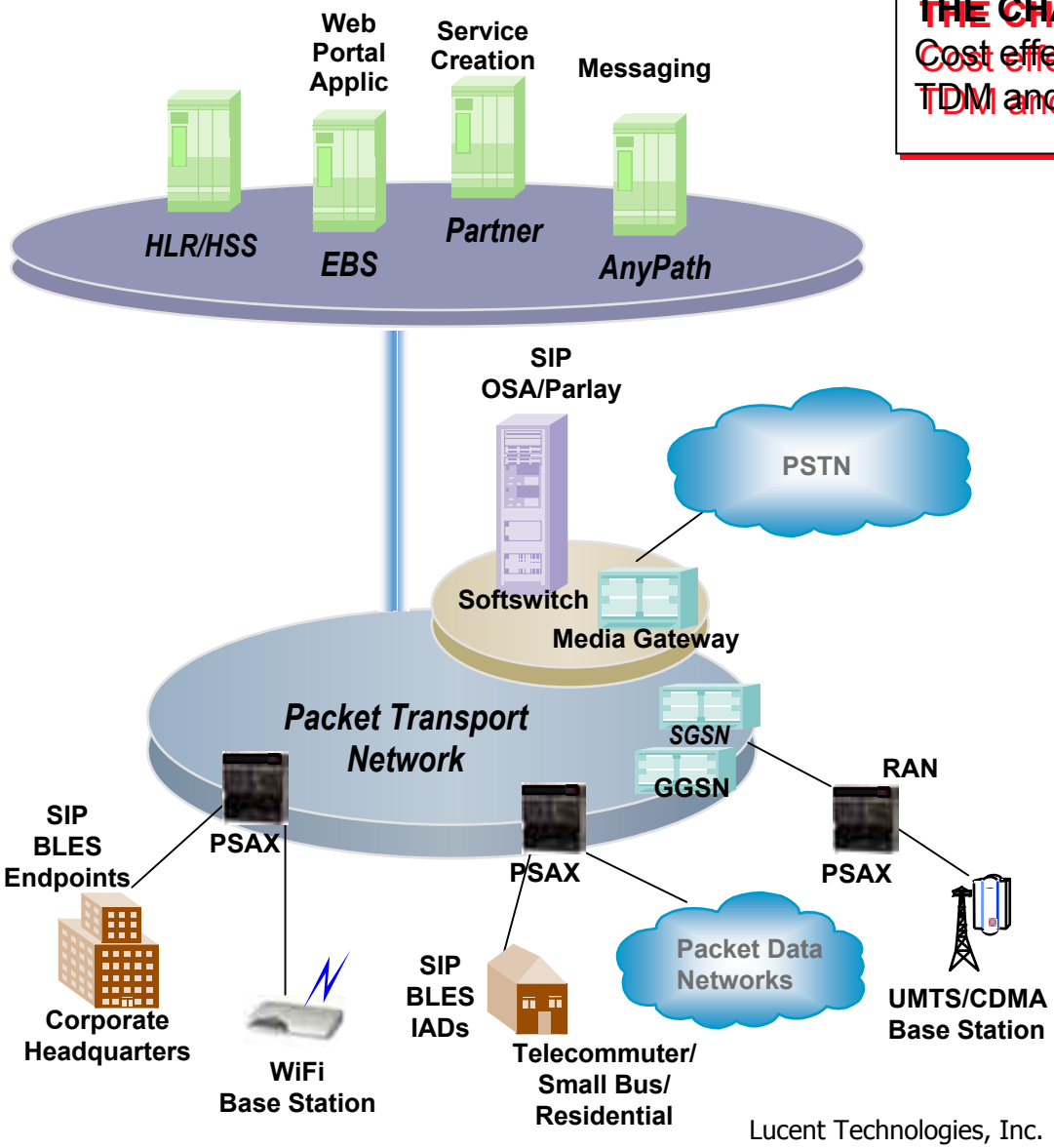

THE CHALLENGE:

Cost effectively interwork Wireless with Wireline TDM and Packet endpoints

THE SOLUTION:

- ✓ PSAX Access Switches provide the means to deliver VoP, Data, and Video revenue services.
- ✓ PSAX employs a large breadth of protocols to interwork customer legacy equipment with converged solutions
- ✓ PSAX reduces the customer OpEx through efficient interworking functions and value-add Bell Labs Innovations
- ✓ PSAX allows customers to gracefully evolve their networks to fit their business objectives

Customer Profile: Choice One

Leading Integrated Communications Services Provider

Challenge

- Cost effectively deliver a full spectrum of services
- Optimize delivery of consolidated services on existing copper loop
- Support for future voice & data services

Solution

- Create a multi-service packet network that integrates voice, video and data services all on a single converged packet network
- Fully integrate package of services

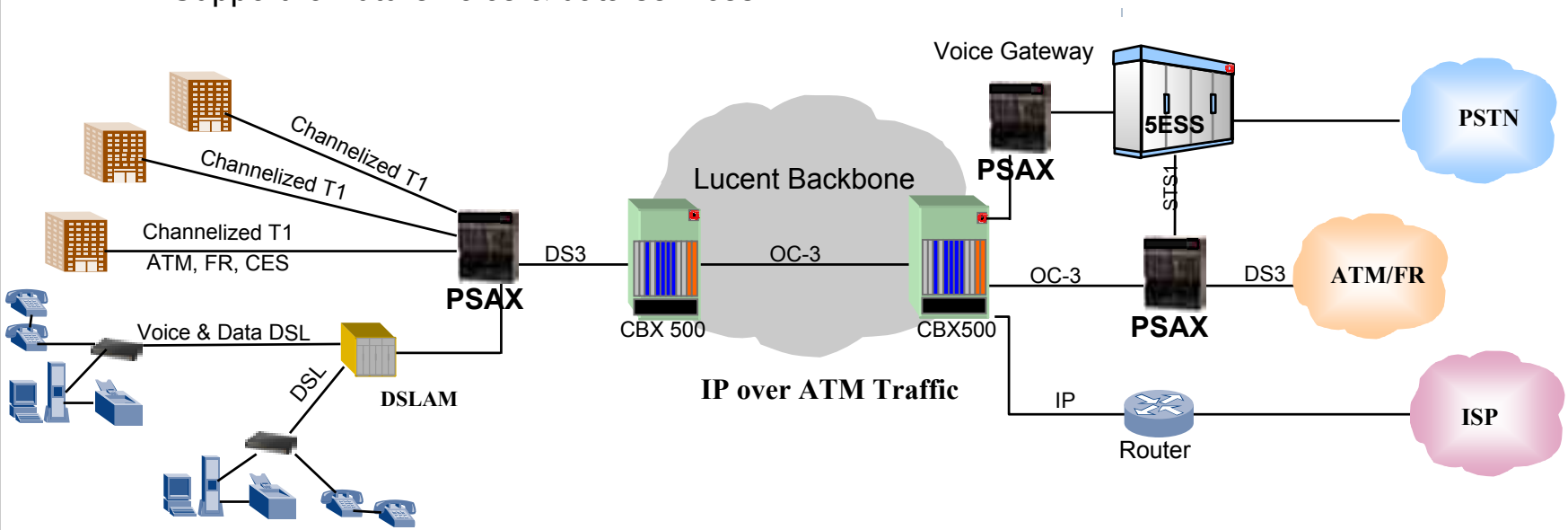

Value to Choice One Network:
PSAX delivers high quality business services plus business class broadband voice and data cost-effectively, limiting capital and operational expenditure while supporting future services growth

PSAX Addresses Wireline Service Provider Needs

Greater Efficiency

- CapEx, OpEx, bandwidth with increased reliability of hardware and software

Cost Effective Interworking

- Enables multiservice interworking to IP with QoS in addition to multiservice layer 2 VPNs

Demand for Voice over Packet

- Converged solutions with Voice over Packet for Business DSL solutions and data aggregation

Any service any port

- Services interworking between IP, FR, and ATM
- Minimizes CapEx enabled by single trunk provisioning
- Reduced sparing and inventory costs

Customer Profile: Orange

Leading EMEA Wireless Provider: Backhaul Network

Challenge

- Reduce backhaul transport costs
- Reduce leased lines and overall operational costs
- Maximize reuse of existing equipment
- Support for future voice & data services

Solution

- Optimize backhaul operations with packet technology
- Statistical multiplexing of multiple data types
- Using the same backhaul network to transport traffic from multiple mobile network types
- Smooth transition between technologies, 3G network ready

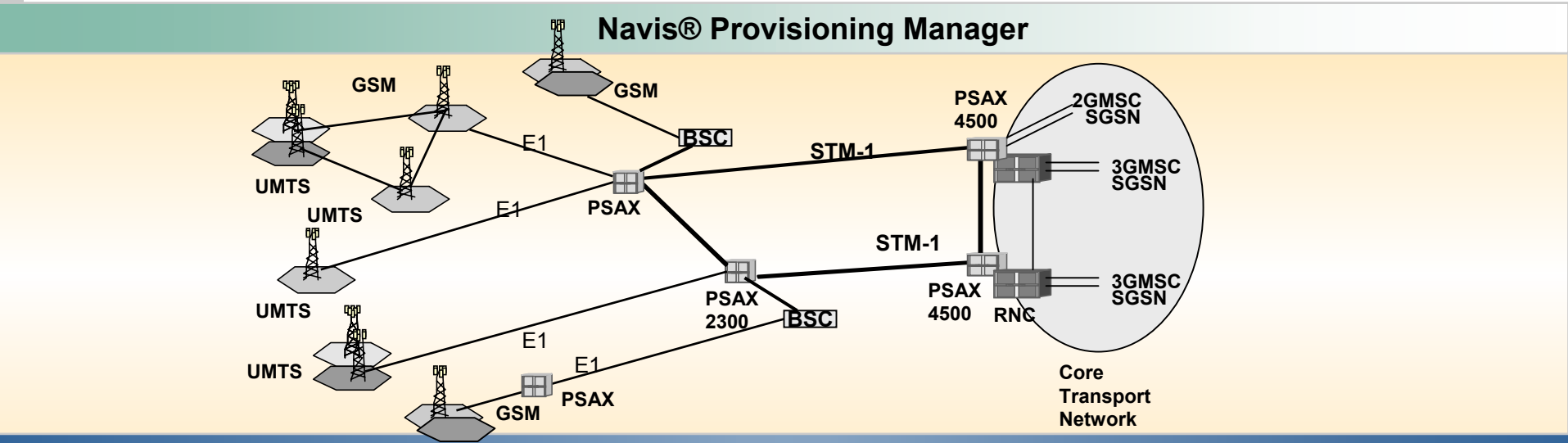

Value to Orange Network: Orange can use the same network to simultaneously transport multiple generations of technology while reducing OA&M costs by managing one network with fewer facilities

PSAX Addresses Mobility Service Provider Needs

Facilities savings

- Statistical multiplexing of various service types (voice, data, video, control, etc.)
- Lucent TDMA – Utilization improvement (approx 35%)
- GSM/GPRS/EDGE – Utilization improvement (approx 40%)
- CDMA/1XEV-DO – Utilization improvement (approx 50%)
- Better utilization of backhaul networks with over-subscription
- Provision for consumer demand not TDM network limitations

Increase speed to market

- Reduce dependence on competitors for transport facilities
- Allow for transport for new data services to be added incrementally

Reduce costs

- OAM: One integrated network, Reduced central office space, Fewer facilities to manage, Low power consumption

Smooth transition between technologies into 3G

- Multiservice along with Bell Labs enhancements for different technologies
- CapEx Investment protection and graceful transition of new radio architectures

The PSAX Success Story

- More than 45,000 chassis shipped Globally
- Hundreds of Global customers, including:

Service Providers

- Choice One
- Cingular
- Conversent
- Citizens/Frontier
- Sprint affiliates
- TEC
- Telmex
- Verizon
- AT&T, AT&T LA, AT&T Canada
- Deutsche Telecom
- China Unicom
- Orange UK
- Polkomtel
- Unicom Mobility
- E-Plus
- mm02
- Moscow Cellular
- MEGAFON

PSAX delivers true multi-service, multi-networking capabilities to the access arena

Wireline and Wireless Edge Networks

Convergence Where It Makes Cents



Joe Merritt

AVP, Business Development

PacketStar ® PSAX Multiservice Media Gateways

Lucent Technologies
Bell Labs Innovations