Leveraging Bell Labs Technology To Support Lucent Strategy

Lucent Technologies Financial Analyst Meeting

Bill O'Shea
President, Bell Labs

Lucent Technologies
Bell Labs Innovations



Bell Labs Today

Bell Labs continues to provide Lucent with unique competitive advantage

- **Significantly improved our processes to integrate Bell Labs technologies into solutions for our customers**
- **Bell Labs technologies continue to shape the evolution of communications networks**
- **New focus on leveraging Bell Labs technology as a differentiator for Lucent Worldwide Services**
- **Investment in long-term research focused on high-impact opportunities**



Improved Processes

Bell Labs is more closely linked with Lucent's business and customers than ever before

- **New strategy alignment process within Bell Labs Research**
- **Tightened communications between Bell Labs, Business Units and Customer Teams**
- **Bell Labs-developed optimization tools and operations technologies support supply chain**
- **New Product Management Architecture (PMA) process for product development**



Technology Development

Bell Labs technology continues to shape communications networks



- Mobile networking
- Next-generation optical and packet networks
- Circuit-to-packet
- Broadband access
- Advanced network and professional services
- Next-generation Operations Support Systems
- Software and services that enhance network security and reliability

Lucent Technologies
Bell Labs Innovations

Mobile Networking

Increasing the efficiency of wireless networks

- **BLAST smart antenna technology**
- **Digital Pre-Distortion low-cost power amplifiers**
- **CELNET 3G traffic monitoring**
- **4G wireless migration and capacity expansion**

Intelligent Antenna for BLAST

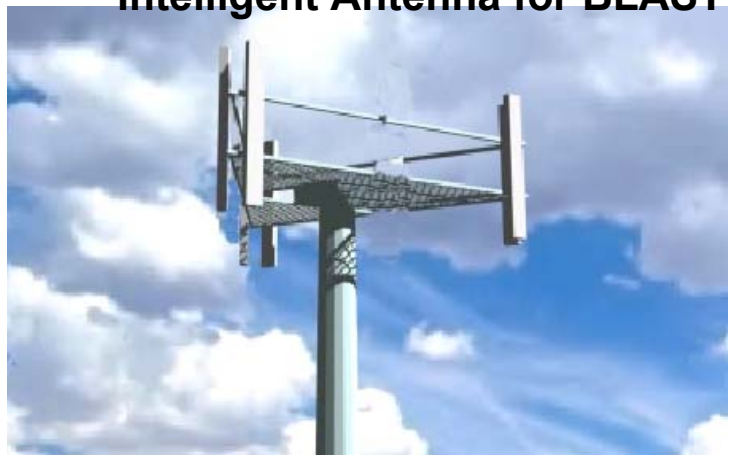

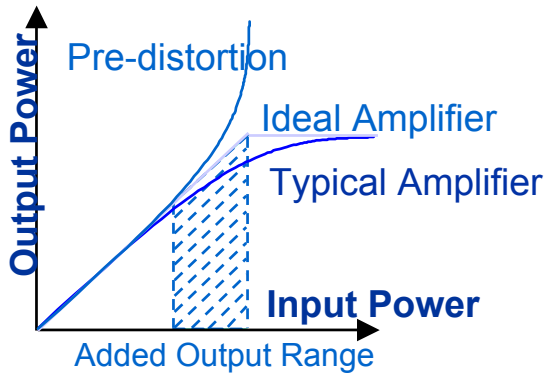

PRE-DISTORTION IMPROVES PERFORMANCE OF TYPICAL AMPLIFIERS

Lucent Technologies
Bell Labs Innovations

Next-Generation Optical

Reducing the cost of building and operating optical networks

- End-to-end optical control plane
- Integrated data/optical switching
- 40 Gb/s optoelectronics
- Reconfigurable, integrated optical Add/Drop Multiplexer

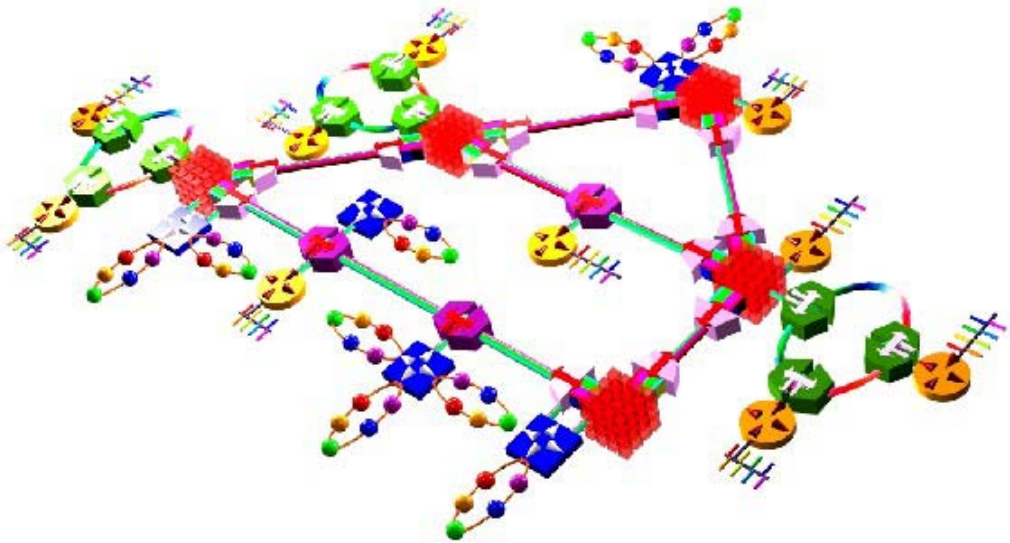

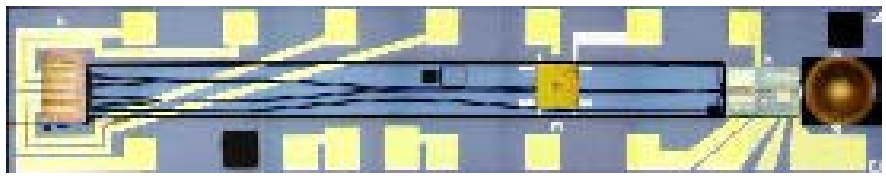

Next-Gen Packet Networks

Bringing reliability and value-added services to data networks

- **iRoute FR/ATM plus IP/MPLS traffic engineering**
- **IPv6 network topology discovery and service-aware routing**
- **VPN provisioning**
- **Photonic packet backplane**

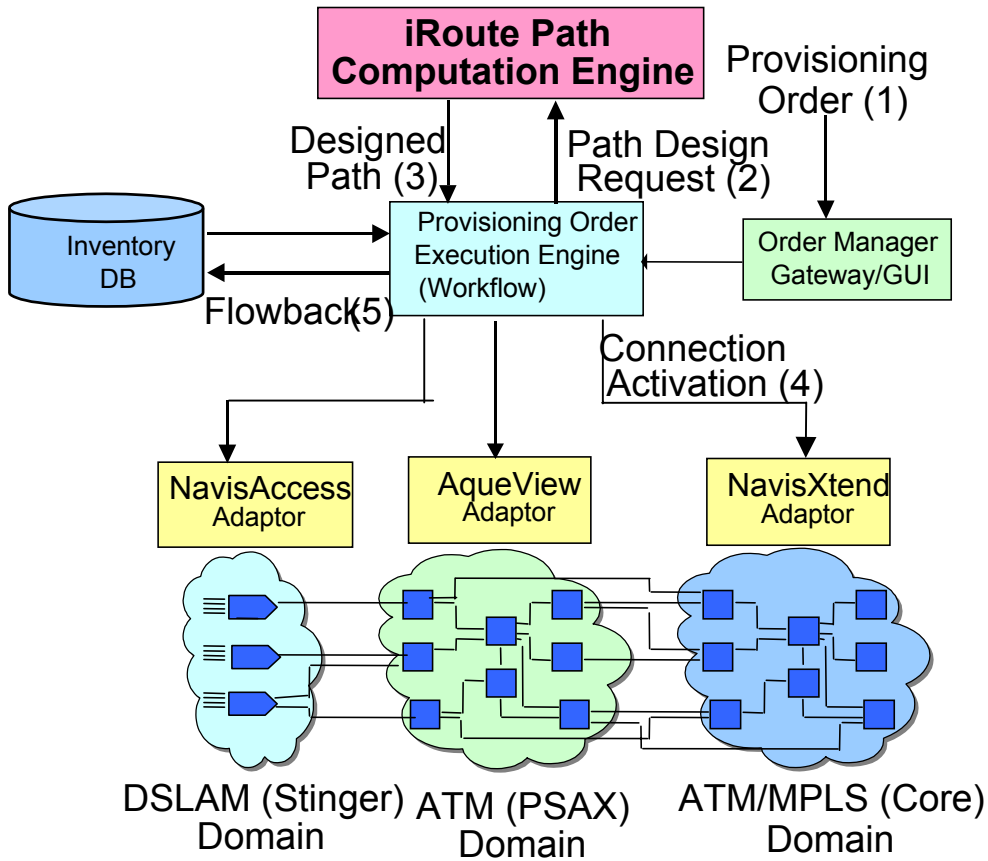

Lucent Technologies
Bell Labs Innovations

Circuit To Packet

Managing the convergence of packet and circuit networks

- SIP enhancements for Enhanced Business Services
- Service Broker architecture
- IP media server
- Multimedia messaging

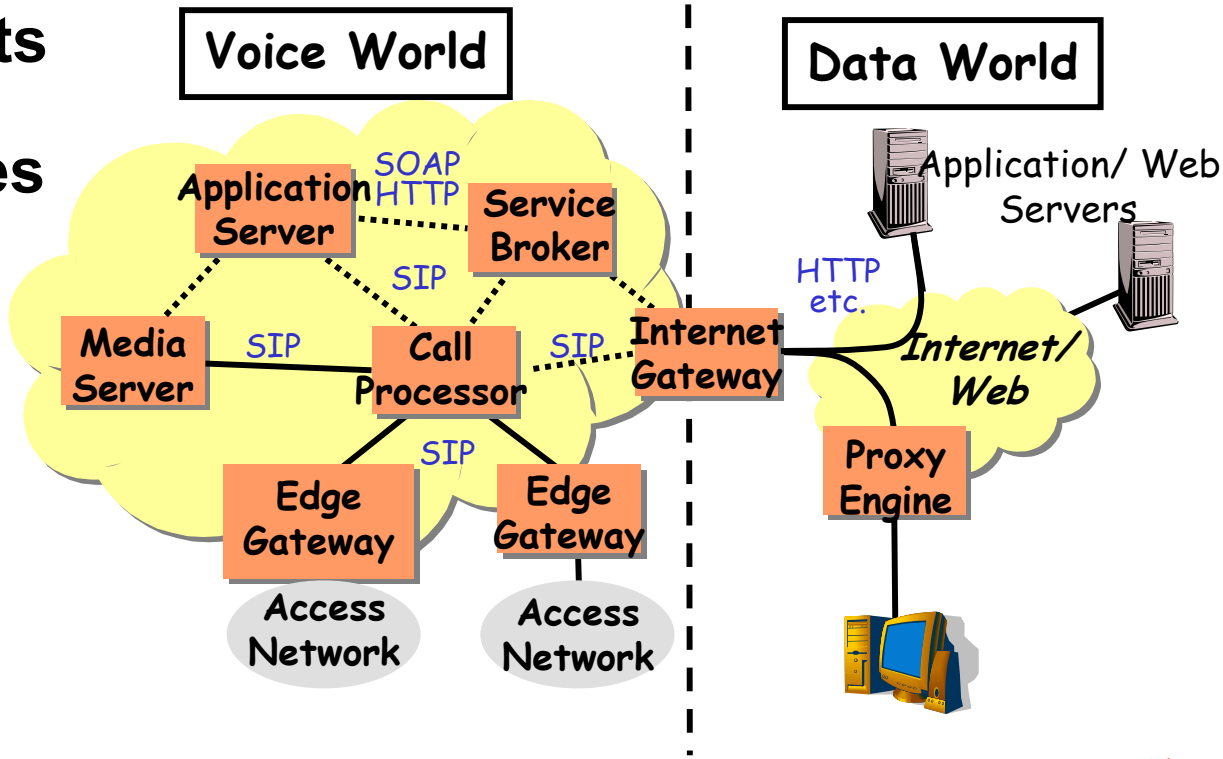

Lucent Technologies
Bell Labs Innovations

Broadband Access

Bringing broadband innovations to access networks

- **Low-cost fiber to the home**
- **Free space optics**
- **Ethernet passive optical networks**
- **Wireless LAN backhaul**

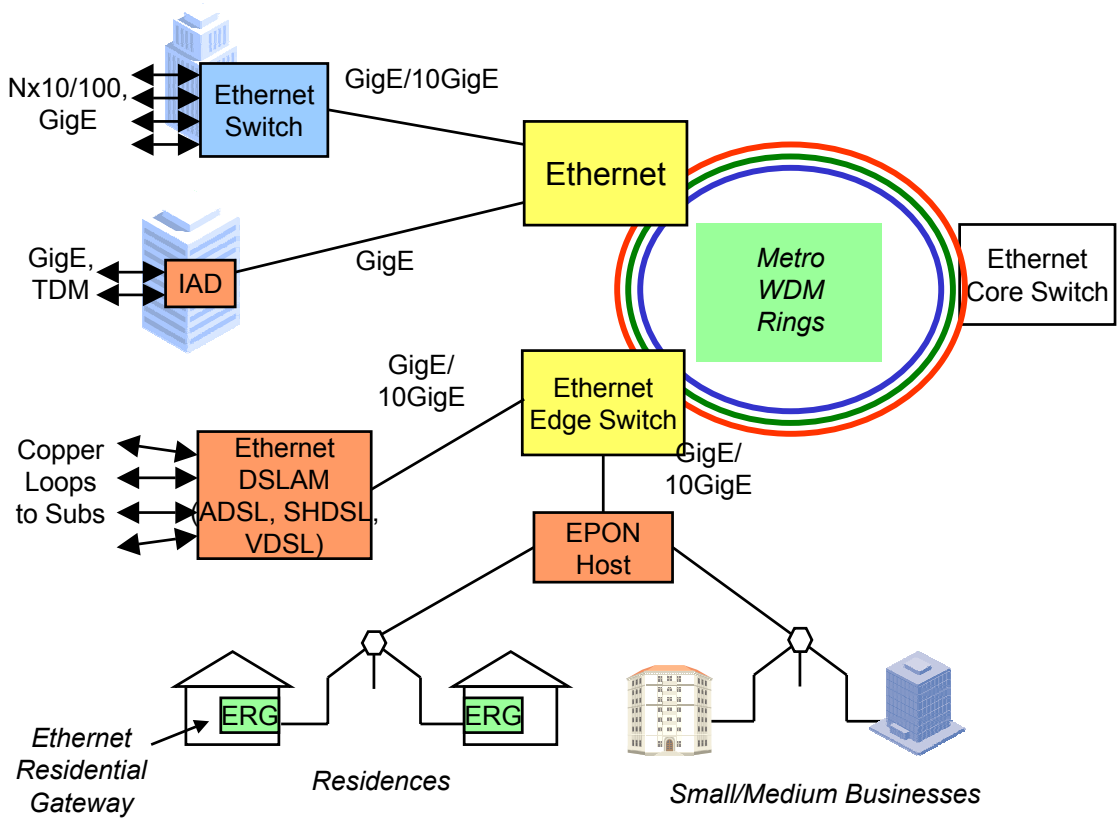

Lucent Technologies
Bell Labs Innovations

Advanced Network And Professional Services

Optimizing the design and performance of networks

- **OCELOT wireless network optimization for coverage and capacity**
- **WaveBuilder DWDM span engineering**
- **Möbius cross-network domain optimization for IP over optical**
- **Revenue Recovery Billing and Inventory Reconciliation**

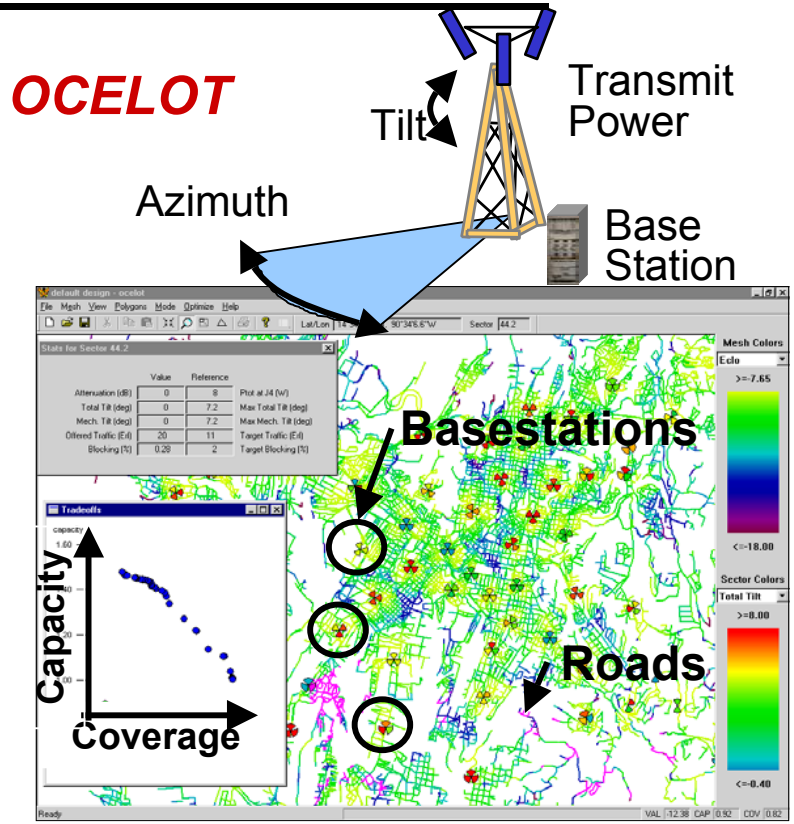

Lucent Technologies
Bell Labs Innovations

Network Security And Reliability

Increasing the availability and security of networks

- **IP SuperSec network-based end-to-end VPN security**
- **NSAS security/ survivability assessment**
- **Perimeter defense analysis**
- **Network Reliability Calculator availability assessment**

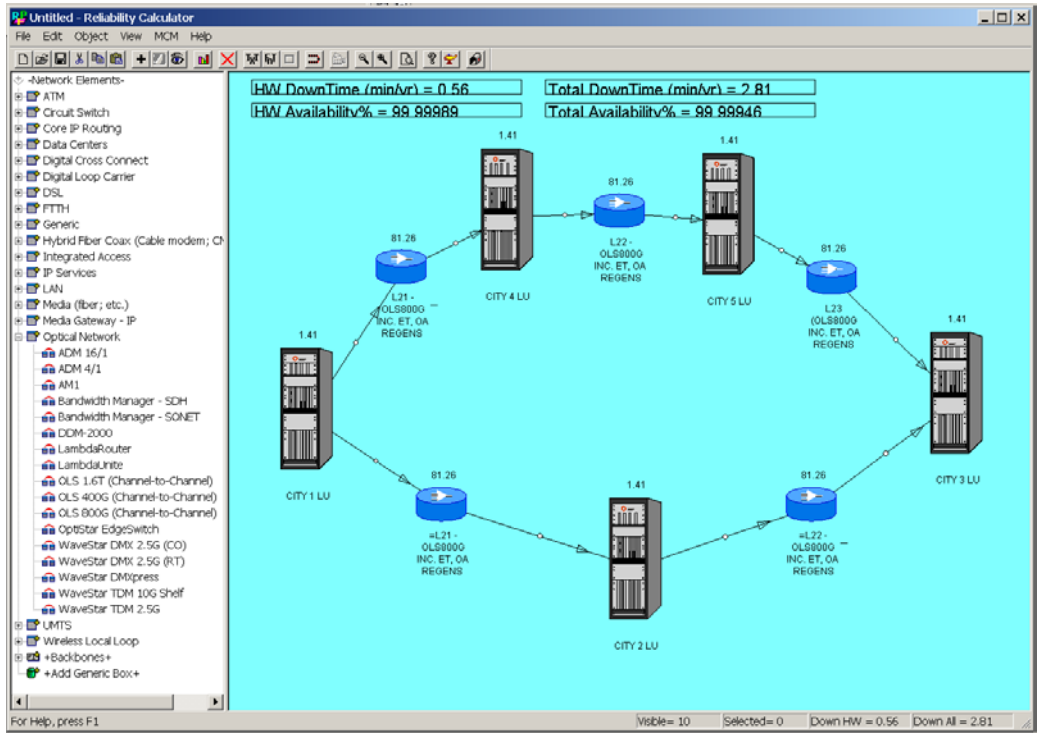

Lucent Technologies
Bell Labs Innovations

Next-Generation Operations Support Systems

Simplifying the management of networks

- **Matisse EMS rules processing engine**
- **NetInventory network topology mapping**
- **iPeer network operations monitoring**

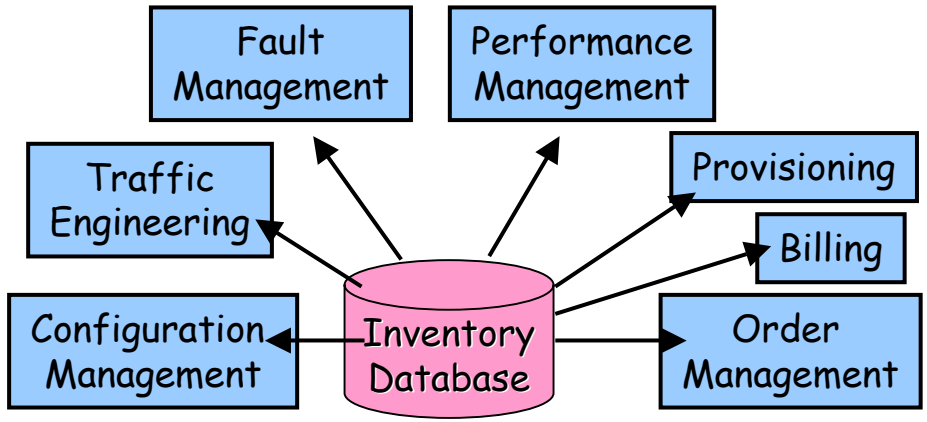

Network Map

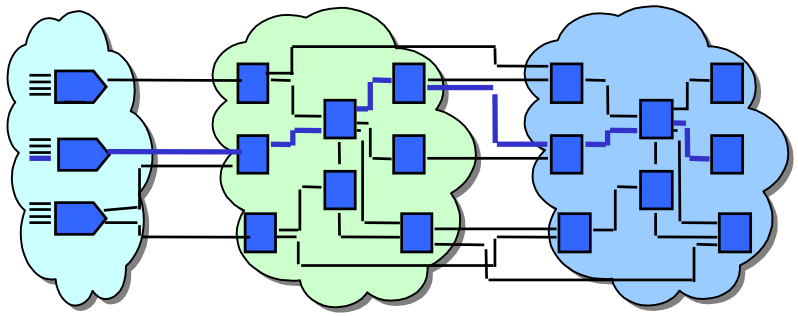

Bell Labs Long-Term Research

✓Mathematical Sciences

- Optimal Scheduling for Wireless Packet Networks
- Risk-Aware Network Revenue Optimization
- Multi-Source Information Propagation Theory

✓Computer Sciences

- Network Topology Modeling
- Software Quality Foundations
- Economies of Scale in Network Design

✓Physical Sciences

- 2D electron gases
- SOI photonics
- Organic semiconductors



Conclusions



Bell Labs continues to provide Lucent with unique competitive advantage

- **Significantly improved our processes to integrate Bell Labs technologies into solutions for our customers**
- **Bell Labs technologies continue to shape the evolution of communications networks**
- **New focus on leveraging Bell Labs technology as a differentiator for Lucent Worldwide Services**
- **Investment in long-term research focused on high-impact opportunities**



Q & A

Lucent Technologies

Continuing the momentum... focusing on the future





Lucent Technologies
Bell Labs Innovations