♦ Seamless Mobility Across IMS and Legacy Circuit Networks

Maria R. G. Azada, Richard P. Ejzak, John J. MacNamara, Donna Sand, and Robin Thompson

The growing desire of network providers to introduce support for voice over IP (VoIP) has created interesting challenges in the area of interoperability with existing wireless circuit networks. The 3rd Generation Partnership Project (3GPP) and the 3rd Generation Partnership Project 2 (3GPP2) standards have defined the IP Multimedia Subsystem (IMS) as the platform for convergence. By definition, IMS is access agnostic; it provides services and features through a common core network, regardless of the means of transport. However, the IMS standards are just beginning to address the challenges associated with interworking with existing cellular circuit networks. Achieving seamless mobility involves supporting both roaming and handoff between networks. This paper discusses the issues involved in providing seamless mobility for subscribers across the packet and circuit domains and proposes network-based solutions. © 2006 Lucent Technologies Inc.

Introduction

Voice over IP (VoIP) on an IP Multimedia Subsystem (IMS) [1, 2, 3, 8] may be one of the next disruptive technologies. End users and service providers are looking at VoIP on IMS as a technology that allows them to offer both lower-cost voice and advanced services. However, VoIP technology will have to continue to interwork with existing circuit voice technology for some time. Clearly, users of a VoIP service will want to make calls to and receive calls from the existing public networks on which circuit voice is the norm.

A second level of interworking comes into play when a VoIP service is provided via a wireless IP access network, such as a wireless local area network (WLAN) (e.g., Wireless Fidelity [Wi-Fi*]) [7] or a cellular IP data network (e.g., code division multiple access [CDMA] 3G-1X [9, 13], CDMA high rate packet data [HRPD] [10], or Universal Mobile Telecommunications System [UMTS*] High-Speed Downlink Packet Access [HSDPA] [5]. Because all handsets for these CDMA and UMTS systems access the network via radio and because ubiquitous wireless IP access with quality of service (QoS) that is acceptable for VoIP is not yet available, an obvious next step is to build dual-mode devices that can operate in either VoIP or circuit-voice mode, thereby providing the best coverage, cost efficiency, and flexibility. In fact, handsets that operate in both VoIP-over-WLAN mode and UMTS, Global System for Mobile Communications* (GSM*) [6], or CDMA circuit-voice mode are, or will soon be, available in the marketplace.

Bell Labs Technical Journal 10(4), 25–38 (2006) © 2006 Lucent Technologies Inc. Published by Wiley Periodicals, Inc. Published online in Wiley InterScience (www.interscience.wiley.com). • DOI: 10.1002/bltj.20121

WILEY InterScience® DISCOVER SOMETHING GREAT

In considering seamless mobility strategies, we separate the market into two segments:

VoIP as an enhancement to circuit service: VoIP over IMS is an enhancement to the wireless circuit network that is intended to provide low-cost residential, in-building, or campus service. Features and user operation are based on the operation of the wireless circuit network. In general, users in this market segment already have a wireless phone and probably want to keep such things as their existing phone number and features. The VoIP over IMS service may be provided by the wireless service provider, or the IMS operator may have a roaming agreement with one or more wireless service providers.

VoIP as a primary service: VoIP over IMS is the main service offer and the wireless circuit network is viewed as a macro-area extension of the VoIP offer. This is often the case in corporate environments, in which end-user service may be a combination of VoIP desk phones (e.g., through an Ethernet) and a WLAN handset when the user is not at his or her desk. The dual-mode handset operating in the public wireless circuit network is viewed as a remote extension to the IMS system. A wireless service provider may offer the IMS service for its corporate customers or a business services firm may offer the IMS service with a bulk-minute agreement with one or more wireless service providers. In this segment, the IMS service is the primary service offered to the users, and the features offered are more likely to take advantage of the applications available on the IMS platforms.

Figure 1 shows a possible scenario for the introduction of VoIP service over WLANs, which are generally considered to be micro-networks within a home or building that use unlicensed spectrum. WLANs or wireless area networks (WANs), e.g., mesh networks of WLAN or WiMAX* services, are being installed on campuses and in metropolitan areas and are being considered in many other places. CDMA 3G-1X circuit and packet, HRPD evolution–data optimized (EV-DO), and UMTS HSDPA are considered macro-networks in licensed spectrum, with power levels and interference

Panel 1. Abbreviations, Acronyms, and Terms

3G-1X—CDMA2000* third generation
3GPP—3rd Generation Partnership Project
ANSI-41—American National Standards Institute–41
CAMEL—Customized Applications for Mobile Enhanced Logic
CDAS—Call delivery application server
CDMA—Code division multiple access
CSCF—Call session control function
Cx LIA—Location information answer
Cx LIR—Location information request
DSL—Digital signaling link
EV-DO—CDMA2000* evolution–data optimized
GSM*—Global System for Mobile Communications*
HLR—Home location register
HRPD—High-rate packet data
HSDPA—High-Speed Downlink Packet Access
HSS—Home subscriber server
IMS—IP Multimedia Subsystem
IP—Internet Protocol
ISDN—Integrated Services Digital Network
MAP—Mobile Application Part
MGC—Media gateway control function
MSC—Mobile switching center
PLMN—Public land mobile network
PSI—Public service identity
PSTN—Public switched telephone network
PUID—Public user identifier
QoS—Quality of service
RANAP—Radio Access Network Application Protocol
RF—Radio frequency
SIP—Session Initiation Protocol
SMS—Short message service
UMTS*—Universal Mobile Telecommunications System
VLR—Visitor location register
VoIP—Voice over IP
WAN—Wireless area network
Wi-Fi*—Wireless Fidelity, an implementation of the IEEE 802.11 standard
WiMAX*—Worldwide Interoperability for Microwave Access, an implementation of the IEEE 802.16 standard
WIN—Wireless intelligent network
WLAN—Wireless local area network

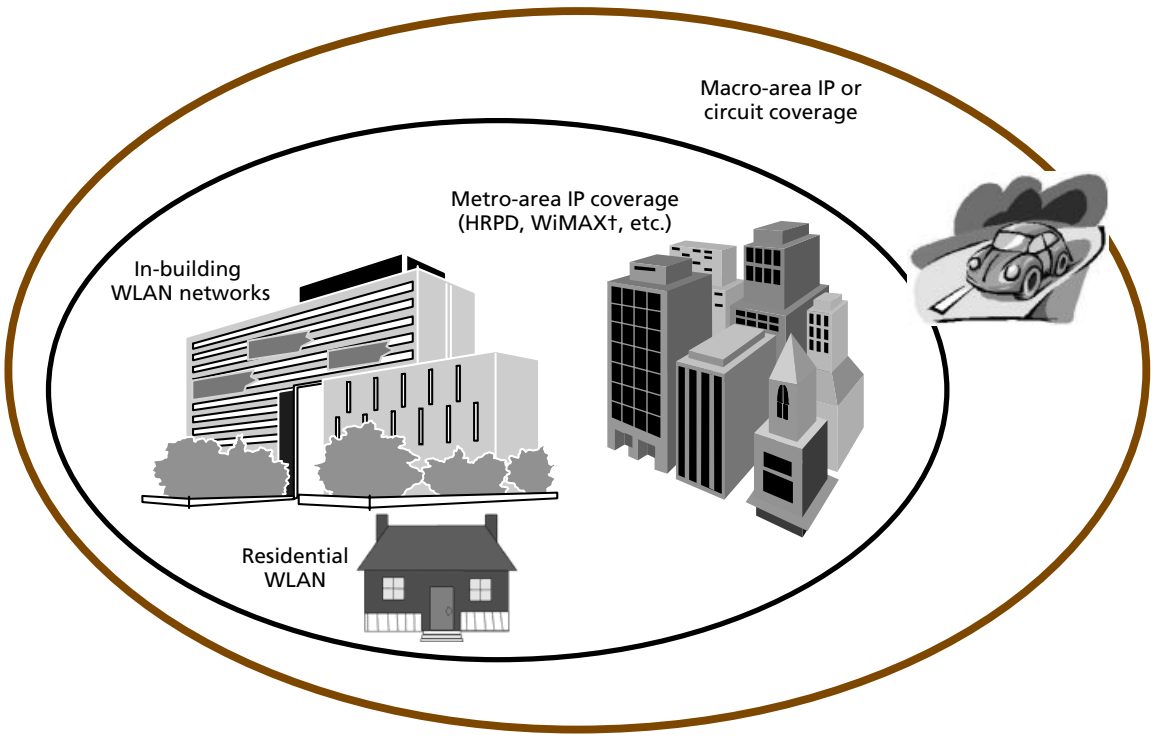

†Registered trademark of the WiMAX Forum.

HRPD—High-rate packet data
IP—Internet Protocol
LAN—Local area network
WiMAX†—Worldwide Interoperability for Microwave Access
WLAN—Wireless LAN

Figure 1.
Micro-networks versus macro-networks.

managed by the spectrum owner. Because the WLAN is in unlicensed spectrum, bandwidth in it may be less expensive and in less demand than bandwidth in the macro-network. On the other hand, the macro-network is likely to be more contiguous and to have fewer dead spots than the micro-network. Thus, VoIP users may want service in both networks, depending on such things as their current network coverage, the rate plans provided by the service provider, and mobility. The metro-network may, like the WLAN, be used to provide lower-cost VoIP service over a coverage area somewhere between the micro- and macro-networks.

In this paper, we deal with the necessity of providing seamless mobility for users as they move from the VoIP/IMS network to the circuit network and back. We define seamless mobility to include:

- Single-number call delivery, in which the network automatically delivers the call to the correct network (i.e., IMS or circuit) based on the user's current mode of operation;
- Handoff or handover, which allows a call initiated in one mode to be continued in another mode as the user moves out of the coverage area supporting the original mode; and
- Support for similar basic features and provisioned feature data across circuit and IMS networks.

IMS as a Platform for Convergence

Figure 2 shows the architecture of the IMS. Call session control functions (CSCFs) are Session Initiation Protocol (SIP) proxies that provide various registration, routing, and security functions for the

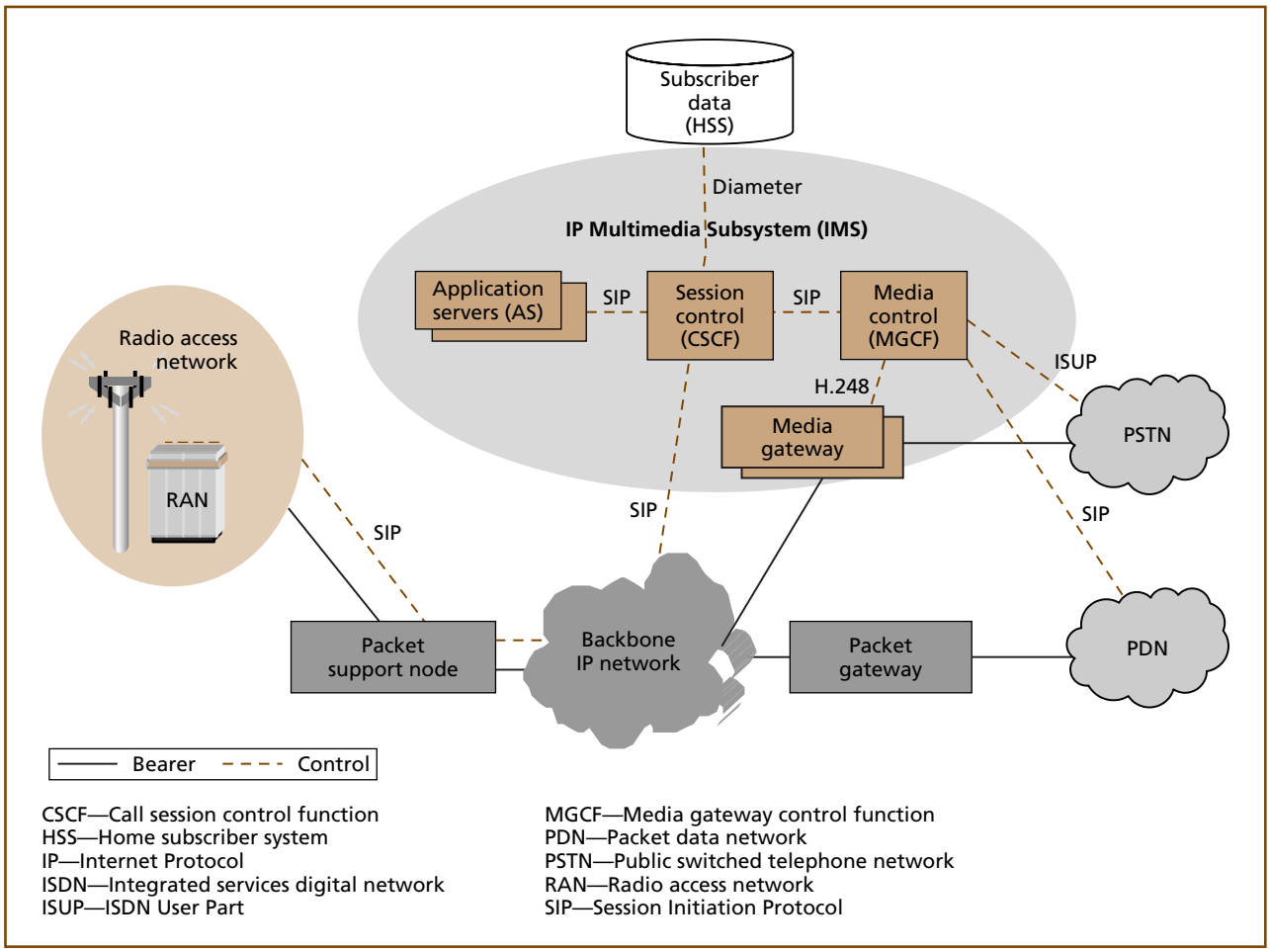

Figure 2.
Architecture of IMS packet core network.

establishment and control of multimedia sessions. The home subscriber server (HSS) is the data repository for subscriber-specific information. During a session, one or more application servers may be invoked on behalf of a subscriber to provide various services. The media gateway control function (MGCF) interworks between SIP and Integrated Services Digit Network (ISDN) User Part (ISUP) to provide basic call delivery between the IMS and the public switched telephone network (PSTN). IMS also includes other functions (e.g., QoS policy control) that are not discussed in the paper.

IMS is uniquely suited to the task of providing a single converged network [12] across multiple access technologies, because of the decoupling of its signaling protocol (i.e., SIP) from the access technologies. In all existing circuit networks, the signaling protocol used by end-user devices is unique to the access technology. For example, CDMA circuit-mode phones signal using the upper-layer signaling standard for CDMA2000* [13], UMTS circuit-mode phones signal using the Radio Access Network Application Protocol (RANAP) defined in 3GPP TS 24.008 [4], and fixed-line phones may signal using International Telecommunication Union, Telecommunication Standardization Sector (ITU-T) Recommendation Q.931 [11] or Telecordia GR506 [15]. The proliferation of protocols requires that networks provide end-user services with a different signaling protocol for each access technology; this makes it difficult to offer the same services to the same subscriber across networks.

IMS avoids this problem by introducing the concept of *home control,* under which the application

server in the home network provides services directly to the end user using the signaling protocol native to the end-user device (i.e., SIP). No translation is performed in the access network. This makes IMS an ideal platform for offering a converged network with common services to subscribers who use VoIP over multiple types of access networks. It allows an operator to offer identical services to a subscriber who accesses the IMS network using, e.g., digital signaling link (DSL), cable, UMTS packet, CDMA packet, or WLAN.

But not all these networks are fully deployed with the features needed for high-quality multimedia services. A key first step toward making IMS-based services available to mobile subscribers is to offer seamless mobility between IMS and existing wireless circuit networks. Unfortunately, existing mobile circuit networks do not incorporate the IMS concept of home control; this creates the challenges that are the subject of this paper.

Providing seamless call delivery, handoff, and feature control between two networks as different as wireless circuit and IMS may seem like an intractable problem, given their fundamental differences in architecture. Apart from their ability to interoperate basic voice calls with the PSTN, these two networks have nothing in common; their architectures and protocols are completely different. The IMS application server is the key mechanism for bridging these two architectures, because it provides absolute control over IMS sessions by signaling with IMS endpoints directly using SIP, rather than indirectly using the mechanisms (e.g., Customized Applications for Mobile Enhanced Logic [CAMEL] and wireless intelligent network [WIN]) available in existing wireless circuit networks. An IMS network may include many application servers with each providing a distinct modular unit of service functionality. Along with filter criteria that allow a serving CSCF (S-CSCF) precise control over the sequencing and invocation of these application servers under various circumstances, this gives the IMS architecture a level of service control unrivaled by any circuit network. This paper will describe alternatives for providing seamless call delivery, handoff, and feature control by creating IMS application servers that combine IMS service control with key functions in the wireless circuit network using legacy circuit network protocols.

Convergence Strategies

The evolution to VoIP/IMS provides interesting challenges for an existing cellular circuit network provider. Fortunately, IMS is an ideal platform for converging both technologies. There are three ways to provide seamless mobility between IMS and circuit mobile networks:

Provide new mechanisms native to IMS, using native IMS protocols like SIP. IP-based terminals have advanced capabilities that make possible better user interfaces and innovative new ways of providing feature control.

Provide an emulation of the circuit mobile switching center (MSC) in the IMS network. The IMS network can replicate key MSC functions and interfaces.

Provide a hybrid solution. The evolution from circuit to packet creates a transition period during which both circuit and packet networks must interwork. However, as the IMS network matures, the need for circuit interworking diminishes; therefore, it may be ideal to provide a combination of circuit MSC emulation and, at the same time, introduce new capabilities.

The following subsections will explore further the options for each aspect of mobility—call delivery, handoffs, and features—and will recommend an evolutionary path.

Call Delivery Roaming

As discussed above, we expect VoIP over IMS to be initially offered in WLAN islands, with macro-network coverage provided via circuit wireless networks. Users will have dual-mode (i.e., VoIP and wireless-circuit) handsets and will move across WLAN access points and between WLAN and existing wireless circuit network air interfaces.

Automatic call delivery to the network and network node currently serving the mobile subscriber is one of the primary requirements in a mobile network today. The existing circuit-based wireless networks have evolved elaborate mobile network registration and network-node-to-network-node Mobile Application

Part (MAP) [6, 14] signaling to manage knowledge of the locations of mobiles and to provide automatic call delivery to them. The addition of IMS as a new type of mobile network complicates this task because of differences in the radio frequency (RF) access protocols and the operation of the IMS network.

The IMS standards do not specifically address the support of roaming between circuit and IMS networks; however, it is possible to provide a roaming/call-delivery function on an IMS application server. We call this function the call delivery application server (CDAS). There are two general strategies for the CDAS.

IMS as routing system-CDAS. In this strategy, all calls to the IMS/cellular user are routed to the IMS, where the routing decision is made. In this strategy, in contrast to the one below, the IMS does not register with the circuit network home location register (HLR) as the serving system. The CDAS in the IMS directs the call to the user via the IMS, if the user is registered in the IMS. Only if the user is not found in the IMS does the CDAS query the HLR with standard 3GPP or ANSI-41 MAP procedures for a wireless circuit network routing number. The call is then routed out of the IMS to the circuit network via the retrieved routing number. This strategy allows the user to be registered simultaneously in the wireless circuit network (e.g., for CDMA IP data services) and the IMS (for application layer services, including VoIP). This call delivery strategy is applicable to both of the market segments described in the introduction to this paper, but it may be most suited to the VoIP-as-primary-service model (e.g., IMS-based service providers with new or ported subscribers homed on the IMS).

Figure 3 shows an example of call delivery using IMS as routing system (IRS)-CDAS. This figure shows a PSTN-to-WLAN handset call. The call comes into the IMS from the PSTN and traverses the normal incoming call path to the S-CSCF. The filter criteria defined for calls to this user's number specify that the CDAS should be included. The CDAS checks the

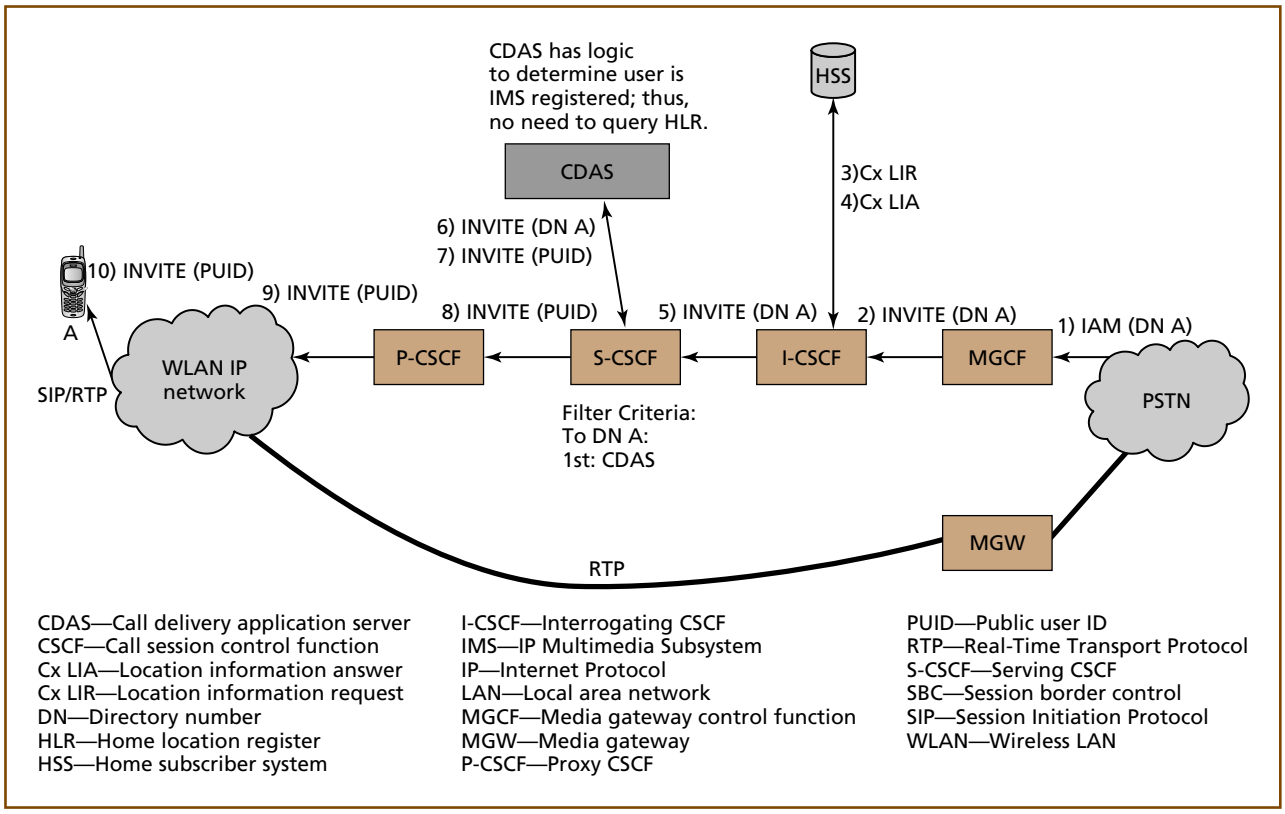

Figure 3.
Call delivery using IMS as routing system-CDAS.

user's IMS registration status and, because the user is currently registered, the call is routed to the user's public user identifier (PUID). If the user had not been found in the IMS, the CDAS would have queried the HLR of the circuit network for the temporary routing number and the call would have been routed out of the IMS and to the MSC serving this user in the wireless network. Thus, the CDAS makes the decision whether to route to the handset via IMS or to the handset via the circuit network.

Circuit network mobility model-CDAS. In this strategy, the IMS emulates a serving or visited MSC in the 3GPP and ANSI-41 reference models for registration and call delivery. Specifically, when the user is registered for service with the IMS, the CDAS provides the specified procedures for registration with the user's HLR. In this way, the HLR views the IMS as the serving or visited system for the mobile user and retrieves the routing directory number from the IMS CDAS when a call is to be delivered to the user. In this model, the CDAS must support:

- Registration of the circuit network,
- Allocation of the routing directory number, and
- Forwarding of the call to the allocated routing directory number for the IMS user.

Moreover, the IMS may be the gateway/home system, in which case it also queries the HLR for the routing number on all calls to this user. This call delivery strategy may be most applicable to the VoIP-as-enhancement-to-circuit model, when the service provider is adding VoIP WLAN as an in-building or residential extension to the wireless circuit network.

Figure 4 shows an example of call delivery to an IMS user using the circuit network mobility model (CNMM)-CDAS. In this scenario, the subscriber's number is "homed" in the circuit network, shown as "Home MSC." Thus, all calls to this number are routed to the home MSC. The home MSC queries the HLR for the routing number to use for call delivery. Because the CDAS registered with the HLR as the serving or visited MSC when the user registered at the IMS, the HLR requests the routing number from the IMS CDAS. The CDAS allocates a temporary routing number and returns it to the HLR and thus to the home MSC system for this user. In this flow, the user is registered on the IMS, so the HLR either queries the IMS (acting as a serving/visited MSC) for the routing number or simply returns a local termination indication. The call is then routed into the IMS, where the CDAS is included in the session set-up path. The CDAS recognizes the routing number as a local number and continues the call to the user's PUID. Again, if the user had been registered in the circuit network, the HLR would have queried the circuit network MSC for the routing number and the call would have been routed to the circuit network. In the CNMM-CDAS strategy, the IMS depends on the HLR having the most correct information on the user's registration status for both the IMS and circuit networks.

The CDAS can be implemented as a standalone application server or it can be colocated with existing functions. There are advantages to both options. For example, implementing the CDAS on the same platform as the wireless circuit network HLR allows registration data and user status to be shared between the application server and HLR on internal interfaces, without the overhead of ANSI-41 or 3GPP MAP procedures. On the other hand, as a standalone entity the CDAS may provide a solution that is optimized for real-time call control and may be more flexible in terms of a variety of network configurations.

Handoffs

Handoff or handover provides the ability to transition between networks during an active call state. To allow for service ubiquity, a call must be able to hand off between WLAN access points and between a WLAN and the neighboring macro network. When possible, it is highly desirable to maintain the call in VoIP mode during the transition. This type of handoff is called a VoIP-to-VoIP handoff. Examples of VoIP-to-VoIP handoffs are those between WLAN access points, between WLAN and HRPD, and between WLAN and UMTS HSDPA. With this type of handoff, it is possible to maintain all active media streams pending QoS support on the target network. Moreover, feature support is less complex, because the IMS network is always in control of the features and circuit-feature interworking is not required. VoIP-to-VoIP transitions provide a more consistent user experience and feature

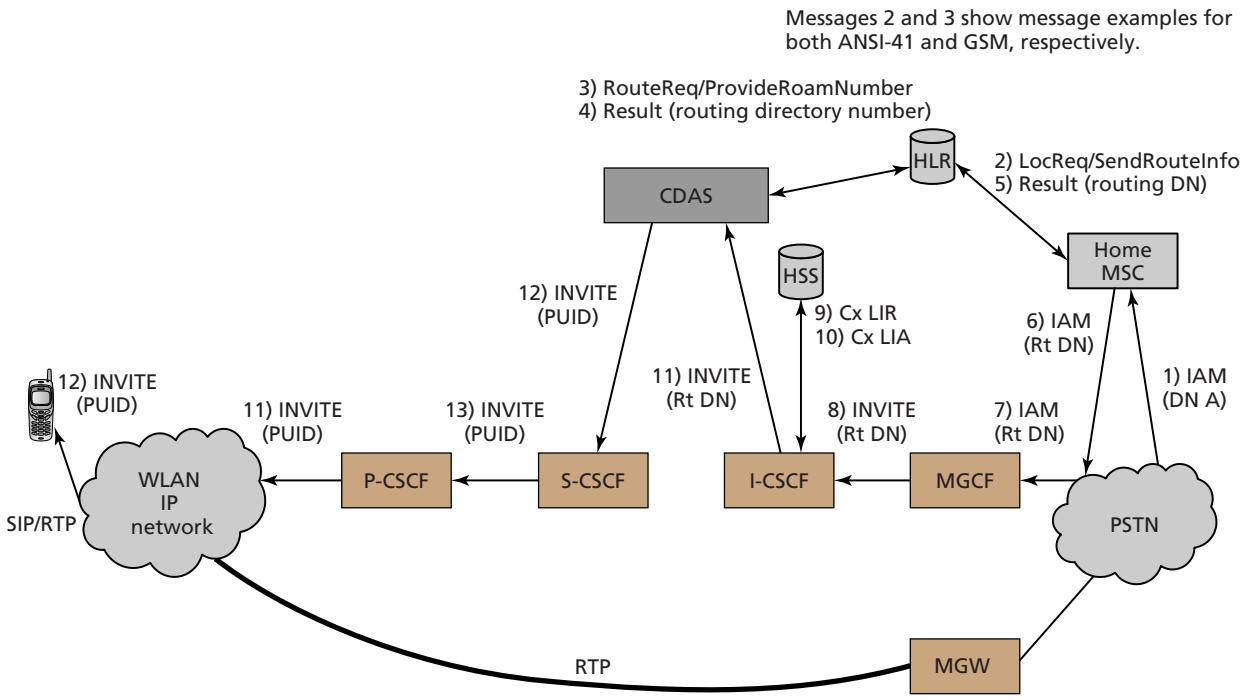

†Registered trademark of GSM Association.

CDAS—Call delivery application server
CSCF—Call session control function
Cx LIA—Location information answer
Cx LIR—Location information request
DN—Directory number
GSM†—Global System for Mobile Communications†
HLR—Home location register
HSS—Home subscriber system
I-CSCF—Interrogating CSCF
IAM—Initial address message
IP—Internet Protocol
LAN—Local area network
MGCF—Media gateway control function
MGW—Media gateway
MSC—Mobile switching center
P-CSCF—Proxy CSCF
PMLN—Public mobile land network
PSTN—Public switched telephone network
PUID—Public user ID
RTP—Real Time Protocol for bearer
S-CSCF—Serving CSCF
WLAN—Wireless LAN

Figure 4.
Call delivery using mobile network mobility model-CDAS.

transparency across the access networks. In most cases, the handoff operation is concentrated within the access network, without any involvement by the IMS core network. VoIP-to-VoIP seamless handoffs rely on underlying IP-handoff mechanisms (e.g., mobileIP) that make handoff and feature parity transparent at the IMS layer. This paper will not explore VoIP-to-VoIP handoff further.

When we introduce VoIP support into an existing circuit network, we can assume that the introduction will result in islands of VoIP access overlaying an existing circuit network. This situation requires that the core network support VoIP-to-circuit-voice handoffs. Because of limitations of the circuit network, only the highest priority media (i.e., voice) is maintained as we cross into the circuit domain. The support of VoIP-to-circuit-voice handoffs makes it necessary to coordinate and interwork with circuit-based features. In IMS, feature control is provided by the IMS network; upon handoff to a circuit MSC, it is transferred to the circuit network.

The remaining discussion of a handoff solution is focused on the support of VoIP-to-circuit-voice handoffs. Circuit-voice-to-VoIP handoffs can be desirable

when there is interest in minimizing the use of circuit-voice resources whenever adequate VoIP resources are available. However, from a market standpoint, support for circuit-to-VoIP handoff is not critical in initial deployments of VoIP; therefore, this type of handoff will not be discussed in this paper.

As discussed above, mobility management consists of providing seamless ubiquity for calls in both idle and active state. Call delivery and roaming address the mobility of a call during the idle state. Handoff provides mobility management during the active state. Unlike call delivery and roaming, the handoff operation requires an application server that is call stateful. Moreover, handoff operations are bearer intensive.

In an IMS network, it is desirable to provide a dedicated application server to support the handoff application. **Figure 5** illustrates a VoIP-to-circuit-voice (i.e., a WLAN to GSM or CDMA circuit) handoff. The initial configuration consists of a VoIP call through the IMS. The numbers outline the steps in performing the handoff, as follows:

1. The mobile equipment monitors the radio interface and determines that the current signal for VoIP service is below threshold and that the circuit network is a viable option.
2. The mobile originates a circuit switched call to the handoff directory number (i.e., the public service identity [PSI]) in the circuit network.

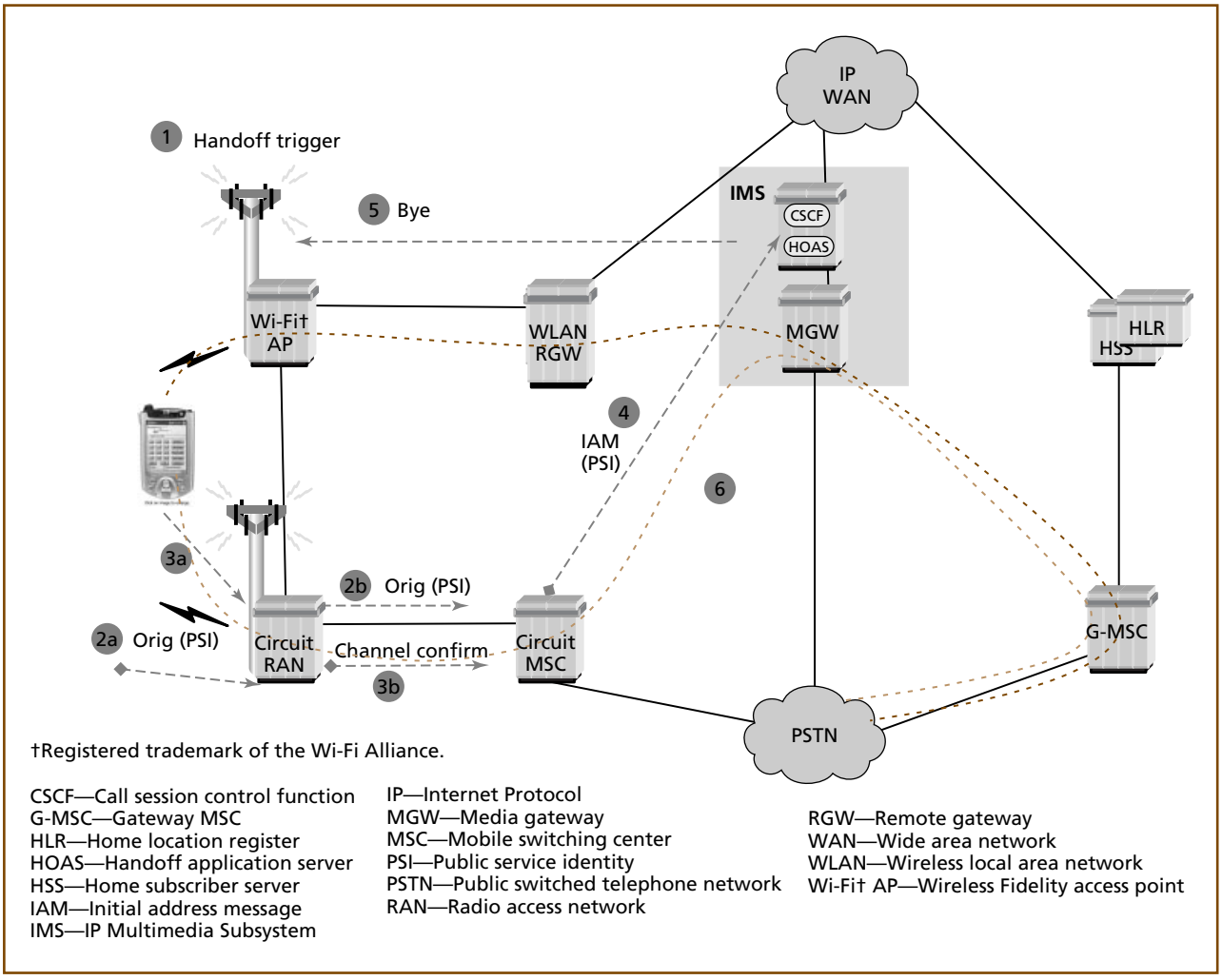

Figure 5.
VoIP to circuit voice handoff.

3. The mobile comes up on the circuit network RF channel while continuing VoIP service as long as possible.
4. The circuit network routes the origination to the IMS system and the handoff application server bridges the incoming call into the existing call for this user.
5. The IMS terminates the VoIP session with the mobile.

The new bearer path is indicated by the number 6 in the figure.

The proposed handoff solution makes some assumptions about the mobile. The mobile client software must be able to determine that a technology change is necessary and to initiate the handoff by originating a new call on the target system. (This is known as the call transfer model.) When a handoff is triggered, the mobile must be able to initiate a new voice call to an IMS application server (i.e., a handoff application server) in the IMS network, using a PSI used for handoff for VoIP call recovery. The voice call is then transferred to the new circuit leg and the original packet leg to the mobile is dropped. From a core network perspective, the call-transfer approach to handoff is beneficial, because it allows commonality in handoff procedures from VoIP to circuit voice and makes possible interworking between any combination of network types. For example, the handoff procedures for a WLAN VoIP to UMTS or GSM circuit voice call should be consistent in the IMS core with the handoff procedures for a WLAN VoIP to CDMA circuit voice call.

The following solutions for VoIP-to-circuit-voice handoff have been explored:

- *Call transfer model.* As previously described, this type of handoff has the mobile initiate a new call origination on the circuit network when it determines from the VoIP and circuit network RF conditions that a handoff is necessary. A variant of the call transfer model uses conference servers to facilitate the transfer.
- *Call termination model.* This type of handoff has the mobile request (via its IP access network) that the network use the circuit network to initiate a termination to the mobile when the mobile determines from the VoIP and circuit network RF conditions that a handoff is necessary. This approach is similar to the call transfer approach, but longer delays are to be expected because of the extra signaling required on termination (e.g., signaling the handoff request to the IMS and paging the mobile from the circuit network).
- *Circuit-based inter-MSC hard handoffs (e.g., ANSI-41/GSM MAP based).* This type of handoff uses the ANSI-41/GSM messaging designed for inter-MSC hard handoffs and SIP application messages to coordinate the handoff. The IMS network appears as a neighbor MSC/cell to the circuit MSC. Signal strength is measured by the mobile, and the mobile triggers a handoff to the handoff application server. Circuit-based handoffs require a predetermined relationship with all handoff neighbors. Inter-vendor trunks and candidate neighbor lists are provisioned to support the handoff. Because IMS has the concept of home control, this solution requires provisioning information for all possible target MSCs. Moreover, using circuit-based MAP messages to support handoff entails providing support for other feature-based MAP messages once a handoff operation has occurred.

The problem of providing a standardized approach to handoff is just beginning to be addressed in the 3GPP and the 3GPP2. We believe that the call transfer solution is the best approach to VoIP-to-circuit-voice handoffs, because it offers the advantages of minimizing the impact on legacy circuit switched networks and reducing setup delay.

Features

Voice over IP via IMS offers new features and enhances the functionality of existing end-user features. In the several decades of its existence, the wireless circuit network has grown to support an impressive number of end-user features and many users have become accustomed to their operation. When it is necessary to support a user with a single handset in both networks, the issue of feature and feature data transparency arises. Moreover, while feature transparency is often thought of only in terms of the look and feel of feature operation for the end user, it may

be equally important to address the sharing of feature data across networks. Data provisioned by the service provider can be synchronized across the IMS and circuit network subscriber databases by a front-end provisioning system designed to populate the required data in both systems, but it is more difficult to keep customer-controlled feature data (e.g., call-forwarding forward-to-directory numbers) in independent database systems synchronized.

Different service providers have different needs, based on their market segments. An existing wireless circuit network service provider may want to continue to provide most of the existing residential end-user services while the subscriber is on the IMS network, in order to provide feature transparency. A broadband service provider may want to offer mobility to existing subscribers via the existing wireless circuit network, while focusing on the new features provided by the IMS network. An existing wireline service provider may want to continue to provide existing wireline and enterprise services, while introducing mobility and additional new IMS services to its subscribers. Different strategies may be appropriate for each of these types of service providers, depending upon their markets.

In general, we do not assume that we are free to modify existing networks to support IMS-like features. Therefore, the IMS adapts to make any accommodations required to support the level of feature transparency with existing networks desired by the service provider. There are three general strategies for the support of features across fundamentally dissimilar networks:

- Provide features on each network independently, based on provisioning in both networks. The feature set for most wireless users consists of the following basic features:
  - Voice-mail coverage and message-waiting notification,
  - Caller identity display,
  - Call waiting/call hold,
  - Three-way calling,
  - Call forwarding (usually to voice mail),
  - Intelligent network (e.g., WIN and CAMEL) services (e.g., virtual private network numbering plan and prepaid), and
  - Text messaging services, such as short message service and instant messaging.

  These features can be provisioned in both the circuit network (as they are today) and the IMS. The IMS telephony feature application server provides the features to the subscribers while they are served by the IMS. This solution allows IMS enhancements for these services to be provided to the user while the user is being served by the IMS network. For example, voice-mail message-waiting notification in the legacy network may consist of a simple envelope icon on the handset screen. Voice-mail message notification in the IMS network could consist of the entire voice-mail message sent as an IP message to the handset. Obviously, the look and feel of the features for the end user will differ between the two networks, although that difference can be minimized by careful design of the user interface on the handset. This solution becomes problematic when a feature includes data modifiable by the end user (e.g., the call-forward-to number), because ideally an end-user change should be reflected in both network feature databases. This problem may be alleviated by the use of a combined HSS/HLR network element that allows both networks access to shared data.
- Provide an emulation of the circuit network switch (e.g., visitor location register [VLR]/MSC) on the IMS to support the end-user features described above. An IMS application server may provide the emulation of the circuit network switch. Moreover, if the emulation includes transfer of the VLR user profile from the circuit network HLR, data consistency can be provided. While it may comfort users if features operate in a similar manner in both networks, the cost of emulating circuit services on the IMS is the loss of the enhanced functionality available in the IMS.
- Combine the two previous strategies so that call delivery features are emulated in the IMS based upon existing home or gateway MSC interactions with the HLR, including such features as call forwarding and incoming call barring. Other features (e.g., SMS or voice-mail notifications) can

be provided in the existing manner while the user is in the legacy network and in enhanced mode while the user is in the IMS network.

Additional features that take advantage of IMS capabilities may be provided when the user is in the IMS network. Such features might include multiple sessions (i.e., voice and Internet sessions provided simultaneously), video streaming, and responding to an incoming call-waiting request with a text or e-mail message.

Conclusion

It is well known that, when new technology is introduced into the telecommunication industry, it is logistically impossible to deploy it everywhere at the same time. As a result, service providers are demanding that new technology IMS networks and wireless circuit networks interoperate seamlessly. We have defined and discussed three main aspects of seamless mobility: call delivery/roaming, handoff, and feature parity across disparate networks. The IMS network must address each of these aspects of seamless mobility so it will not disrupt the operation of the existing wireless circuit network and will allow the user to take full advantage of both networks. We have described alternative strategies to address these requirements and have demonstrated that IMS has the characteristics needed to be the common network platform of the future for all access types. Finally, we have shown how these alternative strategies can address the varying needs of market segments such as corporate and cellular extension.

The solutions we have recommended to the issues posed by the three main aspects of seamless mobility take advantage of a key capability of the IMS network called the application server. The power of the application server in the IMS architecture comes from the native use of SIP between all signaling nodes in the architecture, including mobiles, CSCFs, and application servers. Using SIP for all these interfaces has the inherent advantage of eliminating the complexity of performing protocol interworking between these devices, as is necessary in existing circuit networks.

Users and service providers demand interoperability and seamless mobility between current legacy wireless circuit networks and the VoIP services offered by the IMS, but this can be seen as only an interim problem that will disappear when VoIP and IMS networks are ubiquitous. As the wireless industry implements and deploys IMS along with its bridges to existing circuit networks, it will be interesting to see how long it will be before coverage is sufficiently widespread that the bridges are no longer needed.

Acknowledgments

The authors would like to acknowledge the efforts of many others who have participated in discussions and studies that contributed to the contents of this paper.

*Trademarks

CDMA2000 is a registered trademark of the Telecommunications Industry Association (TIA-USA).

Global System for Mobile Communications and GSM are registered trademarks of GSM Association.

UMTS is a trademark of the European Telecommunications Standards Institute (ETSI) under auspices of the ITU.

Wi-Fi is a registered trademark of the Wi-Fi Alliance.

WiMAX is a registered trademark of the WiMAX Forum.

References

[1] 3rd Generation Partnership Project, "Service Requirements for the Internet Protocol (IP) Multimedia Core Network Subsystem (IMS); Stage 1, Stage 3 (release 5)," 3GPP TS 22.228 v5.4.0, Mar. 2003, <http://www.3gpp.org/ftp/Specs/html-info/22228.htm>.

[2] 3rd Generation Partnership Project, "Service Requirements for the Internet Protocol (IP) Multimedia Core Network Subsystem (IMS); Stage 1, Stage 3 (release 5)," 3GPP TS 23.228 v5.4.0, Mar. 2003, <http://www.3gpp.org/ftp/Specs/html-info/23228.htm>.

[3] 3rd Generation Partnership Project, "IP Multimedia Call Control Protocol Based on SIP and SDP, Stage 3 (release 5)," 3GPP TS 24.229 v5.4.0, Mar. 2003, <http://www.3gpp.org/ftp/Specs/html-info/24229.htm>.

[4] 3rd Generation Partnership Project, "Mobile Radio Interface Layer 3 Specification," 3GPP TS 24.008 (release 6), Dec. 2004, <http://www.3gpp.org/ftp/Specs/html-info/24008.htm>.

[5] 3rd Generation Partnership Project, "UTRA High Speed Downlink Packet Access (HSDPA); Overall Description," 3GPP TS 25.308 v 6.3.0, Dec. 2004, <http://www.3gpp.org/ftp/Specs/html-info/25308.htm>.

[6] 3rd Generation Partnership Project, "Mobile Application Part (MAP) Specification," 3GPP TS 29.002 v 6.8.0, Dec. 2004, <http://www.3gpp.org/ftp/Specs/html-info/29002.htm>.
[7] 3rd Generation Partnership Project "3GPP System to Wireless Local Area Network (WLAN) Interworking; System Description," 3GPP TS 23.234 v6.3.0, Jan. 2005, <http://www.3gpp.org/ftp/Specs/html-info/23234.htm>.
[8] 3rd Generation Partnership Project 2, "IP Multimedia Domain System Requirements," 3GPP2 S.R0058, Apr. 2003, <http://www.3gpp2.org/public_html/specs/S.R0058–0_v1.0_110703.pdf>.
[9] 3rd Generation Partnership Project 2, "IP Network Architecture Model for cdma2000 Spread Spectrum Systems," 3GPP2 R0037–0 v3.0, Aug. 2003, <http://www.3gpp2.org/public_html/specs/S.R0037–0_v3.0_111303.pdf>.
[10] 3rd Generation Partnership Project 2, "cdma2000 High Rate Packet Data Air Interface Specification," 3GPP2 C.S0024–0 v4.0, Oct., 2003, <http://www.3gpp2.org/Public_html/specs/S.R0037–0_v3.0_111303.pdf>.
[11] 3rd Generation Partnership Project 2, "Upper Layer (Layer 3) Signaling Standard for cdma2000 Spread Spectrum Systems—Release B," 3GPP2 C.S0005-C v2.0, July 2004, <http://www.3gpp2.org/public_html/specs/C.S0005-C_v2.0_040729.pdf>.
[12] R. P. Ejzak, H. A. Lassers, S. D. Olmstead, and R. J. Wilson, "Flexent IMS—The Convergence of Circuit and Packet Core Networks," Bell Labs Tech. J. 7:2 (2002), 105–124.
[13] International Telecommunication Union, Telecommunication Standardization Sector, "ISDN User-Network Interface Layer 3 Specification for Basic Call Control," ITU-T Rec. Q.931, May 1998, <http://www.itu.int/rec/recommendation.asp?type=items&lang=E&parent=T-REC-Q.931–199805-I>.
[14] Telecommunications Industry Association, TIA Standard 41, "Wireless Radiotelecommunications Intersystem Operations—Release E," TIA Standard 41, Apr. 2004.
[15] Telecordia, "LSSGR Signaling for Analog Line Interfaces," GR 506, Nov. 1996, <http://telecom-info.telcordia.com/ido/AUX/GR_506_TOC.i01.pdf>.

(Manuscript approved September 2005)

MARIA R. G. AZADA is a member of technical staff in the Core Network Systems Engineering Department in Mobility Solutions at Lucent Technologies in Indian Hill, Naperville. She holds an M.S. degree in computer science from Illinois Institute of Technology in Chicago. Her current responsibilities include systems engineering, architecture, and standards support to evolve traditional circuit-based networks into packet-based networks.



RICHARD P. EJZAK is a consulting member of technical staff in the Core Network Systems Engineering Department in Mobility Solutions at Lucent Technologies in Naperville, Illinois. He holds a B.S. degree in electronics engineering from the University of Michigan in Ann Arbor and M.S. and Ph.D. degrees, both in computer science, from Northwestern University in Evanston, Illinois. Dr. Ejzak is currently involved in product concept development in wireless IP telephony for CDMA and UMTS core networks in support of systems engineering, architecture, and standards. He holds nineteen patents.



JOHN J. MACNAMARA is a technical manager in the Core Network Systems Engineering Department in Mobility Solutions at Lucent Technologies in Naperville, Illinois. He holds B.S. and M.S. degrees in computer science from North Central College in Naperville, Illinois. He is currently involved in developing product and architectural direction for circuit to packet network evolution toward the IP Multimedia Subsystem.



DONNA SAND is a distinguished member of technical staff in the Core Network Systems Engineering Department at Bell Labs in Redmond, Washington. She conducts systems engineering for the IMS core network and IMS application servers, focusing on projects for circuit/packet roaming and handover. She has an A.A.S degree in business data processing from the College of DuPage in Glen Ellyn, Illinois, a B.S. degree in computer science from Benedictine University in Lisle, Illinois, and an M.S. degree in computer science from Northwestern University in Evanston, Illinois.



ROBIN THOMPSON is a distinguished member of



technical staff in the Core Network Systems Engineering Department in Mobility Solutions at Lucent Technologies in Naperville, Illinois. He holds a B.S. degree in mathematics and computer science from Manchester College in North Manchester, Indiana, and an M.S. degree in applied mathematics from Clemson University in South Carolina. His current responsibilities include systems engineering work in support of circuit to packet network evolution and associated migration activities. He holds twelve patents. ◆