Ascend

November 1996

MultiDSL

DIGITAL SUBSCRIBER LINE

The Future of Remote Access

TECHNICAL OVERVIEW

ASCEND

The remote access market is undergoing a major metamorphosis. Three factors serve as catalysts for change. First is the growing number of users demanding high-performance Internet and remote access. Second is the Telecommunications Reform Act, which is fostering broader competition through deregulation. Third is congestion in the public switched telephone network (PSTN), designed for voice traffic.

To meet the demand for remote access in this changing environment, advances in technology are making it possible to get more from the existing infrastructure. The most promising of these technologies is the Digital Subscriber Line (DSL). This document highlights DSL technology and compares it to three alternatives: analog modems; integrated services digital network (ISDN); and cable modems.

WHAT IS DSL?

DSL is a promising technology that:

- dramatically increases bandwidth to the subscriber
- utilizes telephone wiring already installed to virtually every home and business in the world, but does not depend on the rest of the PSTN infrastructure
- offers faster set-up times than the PSTN, which is slowed down even further by the modem handshaking sequence
- allows local and long-distance carriers, Competitive Access Providers (CAPs) and Internet service providers (ISPs) to offer cost-effective flat-rate services

DSL is being proposed in several versions that vary in both bandwidth and reach. The most popular version offers a 200-fold increase in throughput over today's fastest analog modems. Some versions are asymmetric with different data rates in the downstream and upstream directions (to and from the subscriber, respectively). Others are symmetric, providing the same data rate both upstream and downstream. Most versions support the typical distance of 18,000 feet between the carrier's central office and subscribers, referred to as the local loop. The 18,000 foot reach covers about three-fourths of all lines in the US, and an even greater percentage in metropolitan areas. Some versions of DSL can operate at higher speeds over shorter distances, and still reach a majority of users.

WHY DSL IS SO PROMISING

Aside from the obvious bandwidth benefit that DSL offers end users, there are three even more important, but less apparent, advantages DSL affords service providers:

- the separation of voice and data communications
- the ability to implement the technology incrementally and inexpensively
- the open marketplace created by local loop deregulation

Separation of Voice and Data

A significant advantage of DSL is its ability to separate data traffic from voice communications. The PSTN was designed to provide a high level of availability for voice calls, which last on average three to five minutes. But analog modem data calls are treated just like voice calls by all local and long-distance carriers. A problem occurs because the typical data call lasts over 20 minutes–the equivalent of about five voice calls. The relentless increase in data traffic is overloading the PSTN. Carriers face two choices: either upgrade the PSTN to handle the increasing demand, or move the majority of data traffic to a separate network designed specifically for data communications. Some carriers have estimated a 10 times cost increase to upgrade the existing PSTN to handle the increasing demand for both voice and data. Offloading data traffic is the only viable and enduring solution. DSL does just that.

© 1996 Ascend Communications, Inc.

Incremental and Inexpensive Implementation

Carriers are leery of making major investments to upgrade existing PSTN equipment and facilities, even if doing so frees up PSTN capacity by offloading most data traffic. The ability to use local loop wiring along with the separation of voice and data traffic combine to create DSL's second advantage: the DSL infrastructure can be implemented incrementally and inexpensively.

The underlying reason for DSL's cost advantage is that data traffic is packet-oriented, whereas all voice calls must be circuit-switched. These voice circuits (also used for analog modem and ISDN data traffic) are maintained on an exclusive basis across the entire PSTN for the duration of a call. In other words, the PSTN infrastructure must reserve bandwidth end-to-end even when no traffic is being passed. Such silence is not a problem for short-duration voice calls, but idle time during longer data sessions wastes precious PSTN resources.

Packet processing, possible with data communications, makes optimal use of end-to-end bandwidth because one user's idle time is filled with other users' traffic. A packet infrastructure is more efficient and more economical for data traffic. Packet-based networks also allow for linear growth in small, manageable phases. The piecemeal approach offers welcomed relief from PSTN's dependence on major upgrades to increase capacity.

Open Marketplace

DSL's third advantage derives from a provision of the Telecommunications Reform Act that opens access to the local loop. This proven cable plant, currently reaching almost every home and business in the US, is communication's diamond in the rough. Now every service provider has access to all of these lines–and customers. The open marketplace fosters competition that will lead to faster and more widespread deployment, along with lower costs for equipment and services.

The diagram below shows the current PSTN architecture, which integrates voice and data communications, compared to the architectural model enabled with DSL. In the DSL model, analog voice and modem data traffic continues to traverse the PSTN; all other data traffic is routed via the packet network. The change may seem subtle, but it has profound long-term potential.

Carrier cost advantages ultimately result in a major indirect benefit to users: lower rates for both voice and data services. In fact without DSL technology, carriers would face inevitable and costly upgrades that could result in higher service fees.

The many advantages and benefits of DSL technology are expected to generate over 6,000,000 installations worldwide by the year 2000, according to Dataquest.

DSL TECHNOLOGIES

There are now four promising versions of DSL technology. Each targets a different type of customer and/or price/performance level. All four share certain characteristics:

- utilize the existing, ubiquitous telephone wiring infrastructure that reaches over 800 million locations worldwide
- deliver greater bandwidth (some deliver even more in the downstream direction where it is needed the most)
- operate by employing special digital signal processing (some use frequencies above the 4 kHz standard for voice communications to take advantage of the local loop's ability to handle up to 1.2 MHz)
- use industry or de facto standards to ensure interoperability
- permit equipment and service prices to be competitive

All four versions of DSL also share certain challenges. The most significant is that the quality of unconditioned wiring varies among carriers (length, gauge, twist consistency, splices, bridge tap, termination, etc.). These variations make characterizing performance difficult at this early stage, which is why different sources often cite different data rates for the same DSL technology. The wiring variations mean that maximum rated performance may not be achievable in all installations. In addition, regulatory reform issues continue to be fought in the courts and legislatures across the

© 1996 Ascend Communications, Inc.

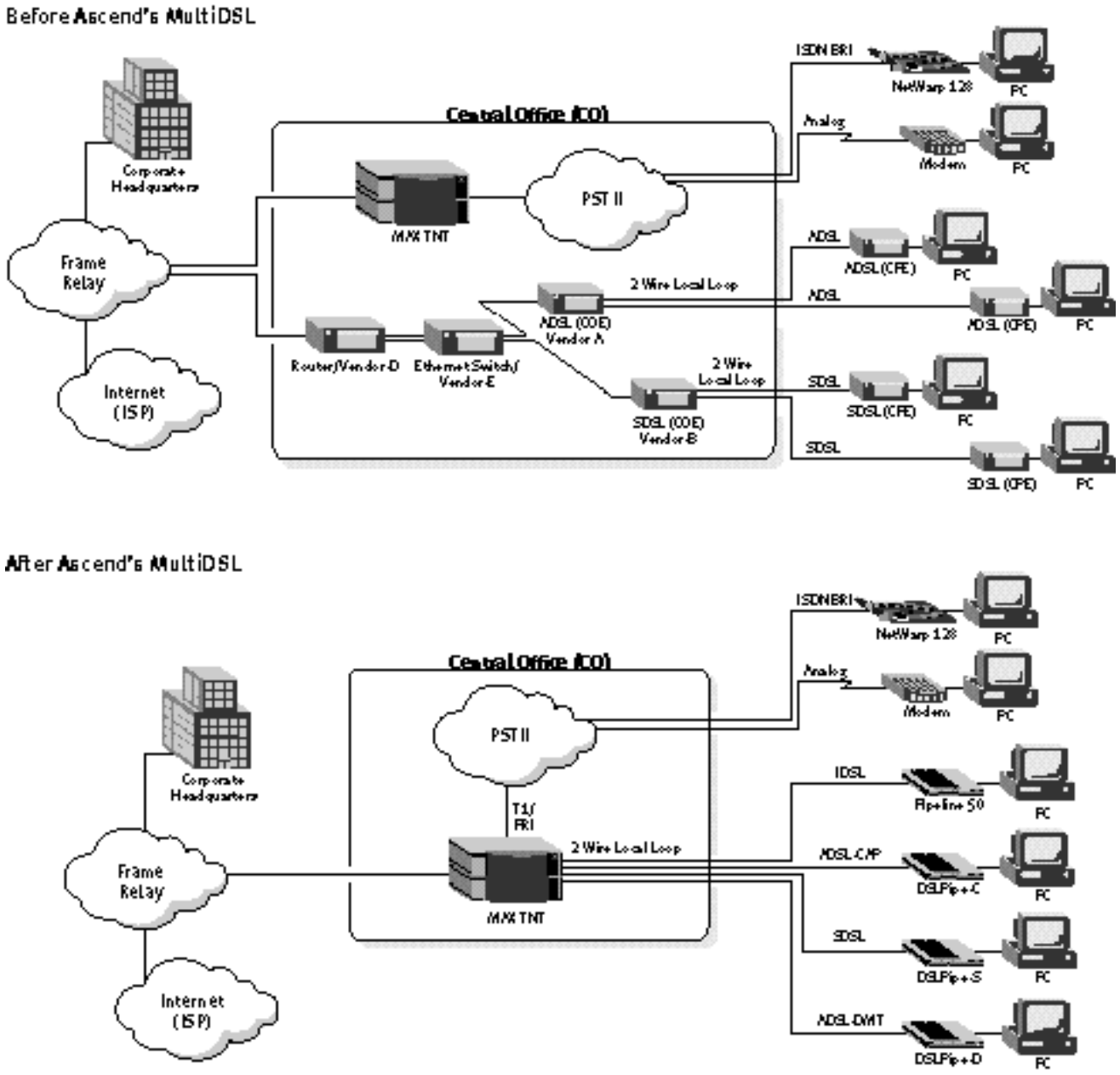

DSL technology prevents data traffic from congesting the PSTN by creating a parallel packet network. The result is better performance for both voice and data, delivered by an enduring and more cost-effective architecture.

country. As a result of these challenges, most DSL technology is presently in the trial stage. Additional testing and development is required, which are both progressing rapidly.

What follows is a brief description of each of the four versions of DSL. (Specific data rates, distances and other pertinent facts can be found in the table.)

ISDN Digital Subscriber Line (IDSL) is actually a mature DSL technology because it is based on ISDN's proven Basic Rate Interface (BRI). Such leverage makes IDSL the only DSL technology that is now fully interoperable with generally available CPE. Deployed as a DSL solution, IDSL offers a BRI-like service compatible with low-cost customer equipment, such as ISDN terminal adapters and remote access routers, available from numerous vendors. Since IDSL only

© 1996 Ascend Communications, Inc.

defines the physical line code, popular higher layer protocols, including PPP, Multilink PPP, MP+ and Frame Relay may be used. IDSL is a data-only service that does not support lifeline voice (a service that keeps telephones operational when the power goes out).

Symmetric Digital Subscriber Line (SDSL) delivers 768 kbps of throughput upstream and downstream. SDSL is based on HDSL, which is sometimes used for T1 loop deployment. It is referred to as the Single-pair Digital Subscriber Line. Because it offers fast symmetrical performance economically on a single pair of wiring, SDSL should be a popular solution for business subscribers, web sites and some individual "power users." SDSL is also a data-only service that does not support lifeline voice.

Asymmetric Digital Subscriber Line (ADSL) provides different data rates in the downstream and upstream directions–to and from the subscriber–hence the term asymmetric. Asymmetric solutions are targeted primarily at individual subscribers who receive more information than they send; businesses need ample bandwidth in both directions. Two line coding schemes are possible with ADSL: Discrete Multi-Tone (DMT) and Carrierless Amplitude and Phase (CAP) modulation. Although the CAP version has been more widely deployed in trials, DMT is the version approved by ANSI's Working Group T1E1.4 as the industry standard. Both DMT and CAP use algorithms that automatically adjust operating speed to the characteristics of a specific line. The Rate Adaptive ADSL (RADSL) lets service providers offer a uniform product without worrying about the differences in performance on a variety of local loops.

ADSL has two significant advantages. First, it is the fastest DSL technology that supports the maximum 18,000 foot distance in the local loop. Second, it supports lifeline voice service. With ADSL, data and lifeline voice services are provided as independent channels on a single line. Other DSL technologies require a separate voice line–two lines total–to provide both services. This is not a problem in most newer buildings which are usually wired for at least of two lines, but ADSL does offer a significant edge in older houses and apartments served by a single line. These two advantages make ADSL the favored longterm solution among vendors and service providers. ADSL has its own developer's forum, with over 60 member companies.

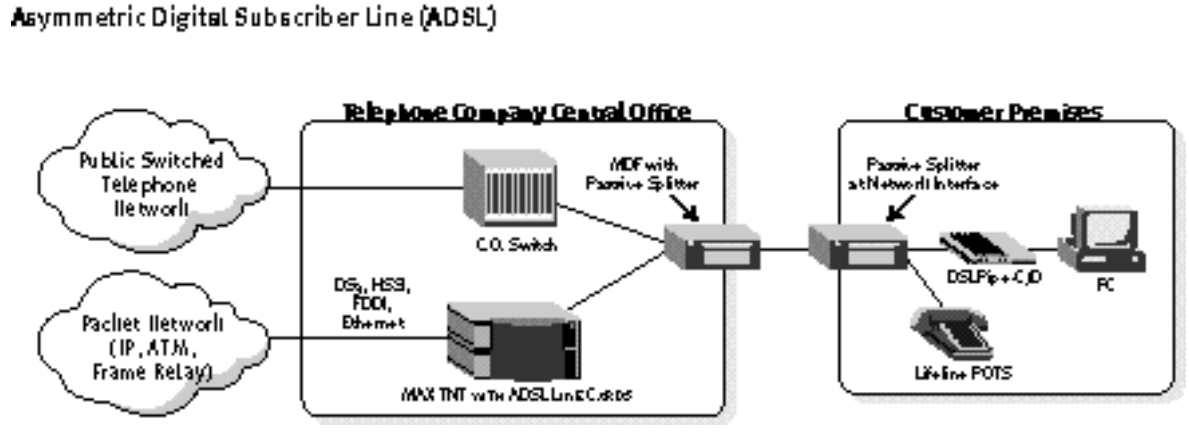

ADSL provides a complete, high-performance voice/data solution on a single line.

© 1996 Ascend Communications, Inc.

Very high-bit-rate Digital Subscriber Line (VDSL) is an asymmetric solution that offers about eight times the performance of ADSL. The downside is that it requires fiber optic equipment close to the subscriber because, at such speeds, its reach is substantially limited. Because infrastructure changes are required in the local loop, VDSL is considered a specialized and long-term technology.

The table below compares the various DSL technologies to each other, as well as to the analog modem, ISDN and cable modem alternatives.

	Upstream Data Rate•	Downstream Data Rate*	Local Loop Reach (Feet)	Life LineVoice	Availability
Analog Modems	14.4-33.6 Kbps	14.4-33.6 Kbps	18,000	Yes	Universal Now (PSTN)
56 kbps Modems	33.6 Kbps	56 Kbps	18,000	Yes	1997 (In trials now)
Cellular Modems	14.4 Kbps	14.4 Kbps	N/A	N/A	Now
ISDN BRI	128 Kbps	128 Kbps	18,000	Yes	Now
IDSL	128 Kbps	128 Kbps	18,000	No	1997 (In trials now)
SDSL	768 Kbps	768 Kbps	12,000	No	1997 (In trials now)
ADSL (DMT)	176 Kbps 224-640 Kbps	1.54 Mbps 6.14 Mbps	18,000 12,000	Yes Yes	1997 (In trials now) 1998 (Trials in 1997)
ADSL (CAP)	64 Kbps 640 Kbps	1.54 Mbps 6.14 Mbps	18,000 12,000	Yes Yes	1997 (In trials now) 1998 (Trials in 1997)
VDSL	640 Kbps 1.6-2.3 Mbps	13 Mbps 52 Mbps	4,500 1,000	Yes Yes	1999 (Trials in 1998) 1999 (Trials in 1998
Cable Modems	0-768 kbps (May require	30 Mbps (shared media)	N/A	No	1998 (In preliminary Trials Only with no standards

** Exclusive of data compression, which may increase throughput for digital services by a factor of four.*

DSL VS. THE ALTERNATIVES

DSL enjoys some compelling advantages over every other means of remote access: it affords excellent price/performance; it offers different versions to cover the full spectrum of individual and business needs; and it provides an enduring architecture for carriers and service providers. Beginning early in 1997, IDSL will present an attractive alternative for the small office/home office (SOHO) environment, with SDSL also available for larger businesses. By 1998, ADSL will complete the high performance all-digital remote access picture. Despite DSL's advantages it will not be available everywhere immediately, leaving users with a few other choices.

Analog modems, for both local loop and cellular communications, are the most widely used devices for individual remote access. But they are slow, susceptible to analog noise and hard to manage. A proposed enhancement will utilize digital modem technology to increase the downstream data rate to 56 Kbps under ideal line conditions. But users will need to replace existing modems with the newer asymmetric ones, which opens the door to other options.

The Integrated Services Digital Network (ISDN) makes substantial performance, reliability and management improvements over analog modems. The Basic Rate Interface provides 128 kbps of symmetric bandwidth—up to 512 kbps with compression. But ISDN is complex and costly because, as the name implies, it integrates voice and data. Even though most users employ ISDN exclusively for data, the "integrated services" remains part of the package. Also, ISDN can tie up two channels through the PSTN for a data call, contributing to congestion of the PSTNIDSL offers the same throughput with reduced complexity and, therefore, at reduced cost. And IDSL is compatible with the installed base of ISDN terminal adapters and remote access routers. ISDN may have begun the migration to digital communications in the local loop, but DSL is the technology that will eventually reach every home and office.

© 1996 Ascend Communications, Inc.

Cable modems are touted as being a way for cable companies to provide data services to their subscribers. But cable companies are facing a series of high hurdles. Only about half of all homes are wired for cable, and very few businesses are cabled. Even more of a problem is that almost none of the existing cable system is set up to handle two-way communications. To provide both upstream and downstream channels, cable companies have two options: either make major (and expensive) enhancements to the cable infrastructure, or utilize a separate connection–likely an analog modem via the local loop. Similarly, cable modems do not support voice or fax. In addition, cable modems share bandwidth with other users and services (much like an Ethernet LAN), and no standards yet exist to ensure cable modem interoperability. With all of these disadvantages, cable modems are severely handicapped in the battle for revenues from the local loop.

PUTTING IT ALL TOGETHER

DSL is an enabling technology that benefits users and service providers alike. The diagram below shows an integrated point-of-presence offering users the full range of access options, and giving service providers an enduring architecture with an order of magnitude improvement in price/performance over the PSTN. What is not shown is the "before" picture with its complicated interconnection of analog modem banks, ISDN terminal adapters, terminal servers, inverse multiplexers, routers, firewalls, etc. A modern WAN access switch on the user side, combined with a fast IP switch on the data backbone, is all a central office needs to implement the next-generation network.

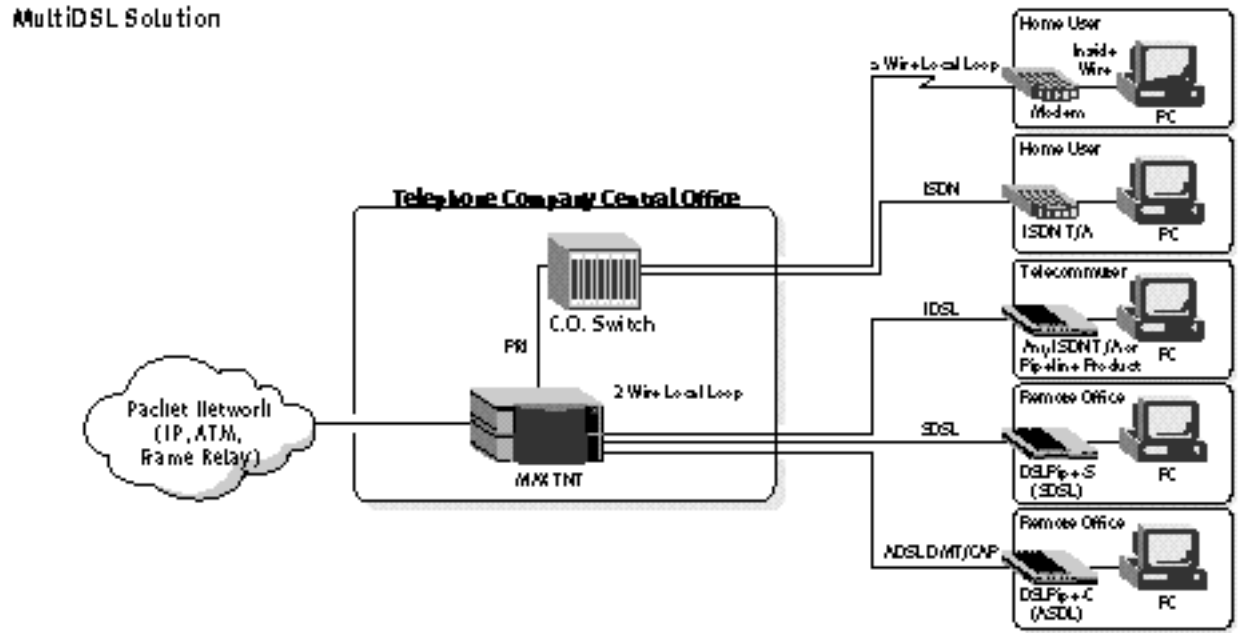

The integrated point-of-presence supports all subscriber access methods, and provides a high-performance backbone interface to the Internet or other packet-based network.

During the transition from analog modems and the PSTN to using wholly digital equipment and services for remote access, there are different recommendations for different participants.

For ***mobile users***, the analog/cellular modem remains the only real choice. All other technologies are "tethered" and, therefore, are not viable options.

© 1996 Ascend Communications, Inc.

For the ***SOHO***, including both Internet access and telecommuting, either ISDN, IDSL or SDSL deliver excellent price/performance and productivity. ISDN is for users that need integrated voice and data services; IDSL is superior for data-only applications. SDSL is ideal for web server hosting applications. As ADSL becomes more widely available, it will provide the bandwidth today's "power users" crave, along with the lifeline voice that all users need.

For ***corporations***, digital communications is recommended for all but mobile users. The choices range from ISDN, T1, fractional T1 and Frame Relay (accessed by ISDN or fractional T1) to IDSL, SDSL and ADSL. IDSL and ADSL are the best choices for SOHO environments, including telecommuters; SDSL, because it is symmetric, is better suited for web server host sites or larger facilities that have an even mix of inbound and outbound traffic.

For ***carriers and service providers***, the sooner DSL technologies are offered, the sooner the strategic split voice/data architecture and service model can be established. IDSL is ready for deployment now, making it a safe and prudent tactical step. With the new architecture solidly in place, both trials and full-scale deployment of other DSL technologies are relatively easy to implement.

The future of remote access is indeed digital, and the future of digital communications has arrived with DSL.

© 1996 Ascend Communications, Inc.



Remote Networking
Solutions That Work.™

Ascend Communications, Inc.
One Ascend Plaza
1701 Harbor Bay Parkway
Alameda, CA 94502, USA
TEL: 510.769.6001

FAX: 510.747.2300
E-mail: info@ascend.com
Toll Free: 800.621.9578
FAX Server: 415.688.4343
Web site: http://www.ascend.com