Product Information

ASCEND

Product Information

Pipeline 50 LS56

REMOTE LAN ACCESS

LEASED AND SWITCHED 56K ACCESS

DUAL INTEGRATED CSU/DSU

When it comes to extending the corporate network to remote users, remote sites and the Internet, two rules apply: keep it simple, and keep it inexpensive. The Pipeline 50 LS56, a member of Ascend's Pipeline family of remote and Internet access systems, helps network managers toe the line on both counts.

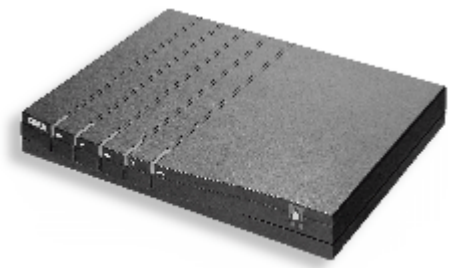

The Ascend Pipeline 50 LS56 connects computers in small offices and homes to corporate backbone networks over leased 56 and switched 56 lines.

With the Pipeline 50 LS56, remote workgroups and individual users gain leased or dialed access to corporate network resources.

In a single modem-sized box, the Pipeline 50 LS56 combines:

- Routing and Bridging
- Dual integrated DSU/CSU for 4-wire leased and switched digital access
- Bandwidth on Demand
- Data compression to 512 kbit/s
- LAN & WAN Network Management

Bandwidth on Demand

Dial-up connections are automatically established and removed as needed.

- Inverse multiplexing up to 112 kbit/s data rate
- Dynamic Bandwidth Allocation (DBA) varies bandwidth
- Data compression boosts bandwidth up to 512 kbit/s
- Supports two simultaneous connections to different locations

Internet Access

Three of the largest Internet Service Providers have standardized on Ascend products for switched digital access.

- Pipeline 50 LS56 provides high-speed, leased and switched 56 dialed digital access to the Internet

Leased and Switched Access

Two connections allow leased and/or switched access.

- Single or Dual switched 56 4-wire with integrated DSU/CSU for leased and switched digital access
- Software configuration of leased and switched interfaces
- Switched 56 lines can provide backup for leased line

Access Routing and Bridging

Sophisticated protocol support ensures efficient connectivity to all LANs and the Internet

- Standard multiprotocol bridging
- IP routing
- PPP and MP+ (Ascend's Multichannel Point-to-Point protocol)
- Transmit and receive packet filtering
- Header and data compression

Full LAN/WAN Management and Control

Manage your remote access equipment and bandwidth as easily as you manage your local LAN facilities.

- Integrated SNMP
- SNMP MIBs
- Telnet remote management
- Rigid security features
- Call Detail Reporting (CDR)
- WAN loopbacks
- FLASH memory for software downline loading

Remote LAN Access:Switched 56 and ISDN

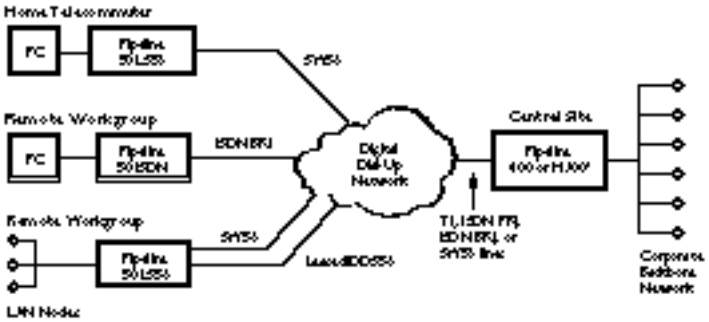

Pipeline products connect branch offices and telecommuters to corporate LANs or to the Internet. They provide 56 or 112 kbit/s access to network resources, as if the users' computers were directly connected to the LAN. The remote Pipeline units connect to a MAX or Pipeline 400 unit using bandwidth aggregated over a channelized T-1 and digital modems.

Remote LAN Access:Leased and Switched 56

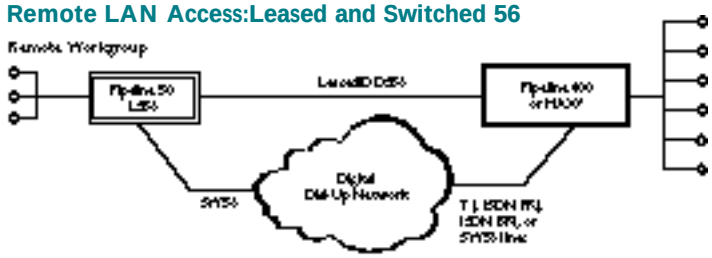

The Pipeline 50 LS56 can be configured for DDS56 leased-line remote access with a built-in switched 56 dial backup.

*For more information see MAX 4000 or Pipeline 400 datasheet.

Pipeline 50 LS56 Back Panel

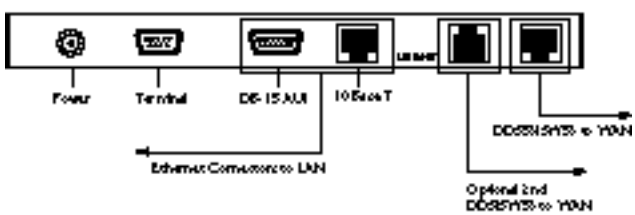

Hardware Specifications

LAN Interfaces	WAN Interfaces	Size	Power Requiremets
Ethernet (AUI,10Base-T)	4-wire 56 kbit/s interfaces leased and/or switched access	8.2" x 6" x 12"	90-130VAC, 0.4A 220-240VAC, 0.2A 47-63Hz

Software Specifications

LAN-to-LAN Routing	Other Protocols	Security	Network Management
IP, IPX,Filtering,Bridging	TCP, DDP, UDP, ICMP, PING,FINGER, ECHO, RIP, ZIP	PAP, CHAP, Callback, Password	SNMP, Telnet Remote Access, Syslog, FLASH EEPROM, Call Detail Reporting (CDR), WAN Loopback

Ascend Communications,Inc. Headquarters

1275 Harbor Bay Parkway
Alameda,California 94502
Tel:510.769.6001
Fax:510.814.2300
E-mail:info@ascend.com
Internet Home Page:
http://www.ascend.com
Toll Free:800.621.9578

Ascend Communications,Inc. (NASDAQ:ASND) products use global bandwidth on demand to enhance and extend corporate backbone networks for remote LAN access,Internet access, telecommuting,video access,and leased-line backup and overflow.

Ascend markets the Multiband,Pipeline and MAX families of products.Ascend products are available in more than 26 countries worldwide.

MAX™,Pipeline™ and Multiband™ are trademarks of Ascend Communications,Inc. Other trade names mentioned in this publication belong to their respective owners.

Specifications are subject to change without notice.

Copyright © 1995
Ascend Communications,Inc.

09-95