T1/PRI Planning

This document contains the specifications of Pipeline/MAX/Multiband's T1/PRI interface, prerequisites to its connection, cabling the lines, and WAN data services.

1 T1/PRI CSU Requirements and Specifications

If a T1/PRI port of Pipeline/MAX/Multiband is equipped with an internal Channel Service Unit (CSU) it can connect directly to the metallic interface of the WAN. T1/PRI ports of Pipeline/MAX/Multiband which are not equipped with internal CSUs cannot connect directly to the WAN, and must connect to other equipment such as external CSUs that provide the interface to the WAN.

Carrier Approval

If the T1/PRI port has an internal CSU, it can connect directly to T1/PRI lines; however, to avoid harming the WAN, you must first contact your carrier for approval before actual installation. Once installed, you are required to notify the carrier prior to disconnecting Pipeline/MAX/Multiband from the WAN. If you disconnect or turn off Pipeline/MAX/Multiband without prior notification, the carrier might temporarily discontinue your T1/PRI service.

Buildout

Your carrier also determines the correct setting for the line buildout setting of the CSU. This buildout value is configured during installation. See the *Pipeline 400 T1/PRI Quick Start Guide* and the **Buildout** parameter in the "Reference to Edit Menus" chapter.

Span Power

Pipeline/MAX/Multiband's internal CSUs are compatible both with dry loop T1/PRI lines and with span-powered or wet-loop powered T1/PRI lines.

If your Multiband does not have front-panel bantam jacks, its CSU ports are compatible only with dry loop spans and are incompatible with span-powered or wet-loop powered spans. For these CSUs, your carrier must provide unpowered dry loop T1 lines. If your Multiband has front-panel bantam jacks, its CSU ports are compatible with both dry loop and wet loop spans.

CSU Specifications

Multiband CSU Registration	2CZUSA-73892-DE-N
MAX CSU Registration	2CZUSA-74421-DE-N
Pipeline 400 CSU Registration	2CZUSA-73893-XD-N
Critical Circuitry Power Source	Dry Loop from local AC power source
Line Capture Frequency	1.544 Mb/s +/- 200 b/s
Line Code	AMI or B8ZS
Line Framing	D4 or ESF
Line Input/Output Impedance	100 Ohms +/- 5%
Received Signal Level Range	DSX-1 level to -27.5 db
Transmitted Signal Level	DSX-1 level into 100 Ohms
Line Buildout	0.0, 7.5, 15.0, or 22.5 db
Pulse Density and Consecutive Zeros Enforcement	In accordance with requirements of AT&T Pub 62411
Line Loopback (LLB) Set Inband Code	(10000) repeating binary pattern
Line Loopback (LLB) Reset Inband Code	(100) repeating binary pattern

2 T1/PRI Cable Maximum Length

The maximum cable distance between the T1/PRI WAN interface equipment and Pipeline/MAX/Multiband should not exceed 655 feet (200 m) if you have a Pipeline/MAX/Multiband without CSUs. Measure this line length and record it when you install Pipeline/MAX/Multiband. You must specify this length when you configure the Line Profile parameters.

3 T1/PRI Cable Specifications

Use only cables specifically constructed for transmission of T1/PRI signals. It should meet standard T1 attenuation and transmission requirements. The following specifications are recommended:

100 Ω
Two twisted pairs, Category 3 or better

4 Limitations on Use of Second T1/PRI Port on Pipeline 400

The second Pipeline 400 T1/PRI port (line #2) can be used for drop-and-insert or PRI-to-T1 conversion only. It should not be connected to the WAN. Thus the maximum number of channels available for user sessions is 23 B-channels when running ISDN, or 24 DS0s when running inband signaling

5 Provisioning of the Switch for T1 Access

If robbed-bit signaling is used, the T1 circuit at the point of presence (POP) must support the following translations for compatibility with Pipeline/MAX/Multiband:

Two-state DTMF (Dual-Tone Multifrequency) dialing	required
Outgoing wink start	required
Incoming Immediate seizure	optional to a switch, does not apply on T1 lines to a PBX
Incoming wink start	optional to a switch, required on T1 lines to a PBX
Incoming digits suppressed	required, except when PBX is connected to T1 line supplied by Pipeline/MAX/Multiband through PRI-to-T1 conversion
Answer supervision	required
Switched data	required: no voice/digital loss plan — however, the drop-and-insert channels to a PBX and the channels to digital modems can be voice.
Neither four-state A and B bit signaling nor pulse dialing are supported; however, these are passed through transparently when Pipeline/MAX/Multiband performs drop-and-insert between lines #1 and #2.	

For further information on wink-start and robbed-bit signaling, see the **Rob Ctl** parameter in the “Reference to Edit Menus” chapter.

6 Provisioning of the Switch for PRI (ISDN) Access

In general, for PRI-based applications, the circuit must comply with these requirements:

ESF framing	recommended
B8ZS line encoding	recommended
*For applications that require non-facility associated signaling (NFAS), you must be connected to an AT&T or Northern Telecom switch provisioned with NFAS. The service provider will supply guidelines for NFAS ID assignments and D-channel assignments. Note that Pipeline/MAX/Multiband must have D-channel signaling functionality and at least two WAN ports to utilize NFAS.	

7 Information Required from the T1/PRI Provider

Request the following information from your WAN provider. The information you receive characterizes your WAN interface and is required when programming Pipeline/MAX/Multiband.

- Inband (robbed-bit) or ISDN signaling
- B8ZS or AMI line encoding

- ESF or D4 framing
- The phone numbers assigned to your T1/PRI interface, channel-by-channel or service-by-service
- Nailed-up channels (also called private WAN), if any

  NOTE: Pipeline/MAX/Multiband can connect to fractional T1 services.
- Unused channels, if any
- Call-by-call services (also called NSF identifier) on the switched channels
- B channel, H0 channel, or H11 channel provisioning
- D-channel assignments
- NFAS ID number (if PRI line is provisioned for NFAS)

NOTE: Pipeline/MAX/Multiband can receive multichannel calls using Combinet or X.25 or Multilink Protocol (MP) encapsulation only if all channels of the call share a common phone number (namely, a hunt group). Hunt groups can be supplied if requested by your T1/PRI provider.

8 Loss of Power / Warm Boot Action

During loss of power or whenever Pipeline/MAX/Multiband restarts, a relay closure returns the T1/PRI signal to the WAN; that is, the T1/PRI line is looped back. However, if Pipeline/MAX/Multiband is configured for framing-compatible drop-and-insert, all channels of line #1 are cut-through to line #2 . (Note, line #1 and line #2 of a MAX expansion module always loopback on loss of power regardless of how configured.)

9 WAN Switched Services Accessible by Pipeline/MAX/Multiband

- Pipeline/MAX/Multiband is compatible with both AT&T and Northern Telecom central office switches. Pipeline/MAX/Multiband can access the following ISDN services. For a listing of the compatible switch types, see the **Switch Type** parameter in the “Reference to Edit Menus” chapter:
  - All T1/PRI switched digital services offered by AT&T's ACCUNET Switched Digital Services (56, 64, 384/H0, and 1536/H11 kbit/s)
  - MCI 56 and 64 kbit/s services
  - Sprint Switched 56 and 64 kbit/s services
  - MultiRate and GloBanD (and GVPN in CCITT countries) PRI network services — multiples of 64 kbit/s

- Pipeline/MAX/Multiband can access only switched-56 kbit/s services from a robbed-bit signaling interface.

NOTE: When requesting any data service, it must be available end-to-end, otherwise the data carried by the call is corrupted or the carrier rejects the call. For example, a Glo-BanD 512 kbit/s call made at a PRI interface is rejected when the called end is BRI, since BRI does not support GloBanD.

- Pipeline/MAX/Multiband can connect to the T1/PRI services in the U.S. and in some countries in the Pacific Rim. See the parameter **Switch Type** in the "Reference to Edit Menus" chapter for a list of the international options on a per country basis.

- In addition to switched circuits, Pipeline/MAX/Multiband can connect to nailed-up circuits and optionally aggregate nailed-up and switched circuits.

10 T1-PBX Support with ISDN Access

Pipeline/MAX/Multiband supports installations where PRI lines are provided from the WAN, but the local PBX uses inband signaling (T1 access). In such installations, Pipeline/MAX/Multiband provides conversion of signaling information between the PRI line from the WAN and the inband signaling line to the PBX. However, this functionality on the standard MAX is only available if an expansion module is installed. See the **Sig Mode** parameter in the "Reference to Edit Menus" for more information.

11 T1/PRI WAN Connectors

The modular T1/PRI ports on Pipeline/MAX/Multiband models follow RJ48C specifications.

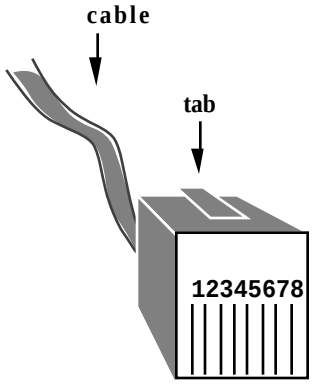

8 Position Modular Plug

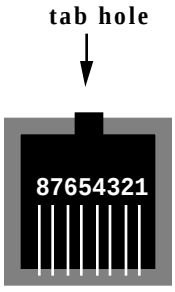

8 Position Modular Jack on Ascend back panel

The following table lists pins on the T1/PRI WAN port used for the Transmit and Receive. The remaining pins are not connected:

Pipeline/MAX/Multiband T1/PRI Logical Interface	RJ48C DTE
Receive (input) pair, Tip (T1) Receive (input) pair, Ring (R1)	Position 2 Position 1
Transmit (output) pair, Tip (T) Transmit (output) pair, Ring (R)	Position 5 Position 4

12 T1/PRI Crossover Cable: RJ48C/RJ48C

This WAN interface cable is available for Pipeline/MAX/Multiband WAN interfaces. This cable is installed when the WAN transmits on pins 5 and 4 and receives on pins 2 and 1; that is, the opposite of the straight-through cable in section 13..

Pair #	Signal	Male RJ48C	Male RJ48C
1	Receive	2 1	5 4
2	Transmit	5 4	2 1

13 T1/PRI Straight Through: RJ48C/RJ48C

This WAN interface cable is available from Ascend for Pipeline/MAX/Multiband WAN interfaces. Before installing this cable, verify the WAN transmits on pins 2 and 1 and receives on pins 5 and 4.

Pair #	Signal	Male RJ48C	Male RJ48C
1	Receive	1 2	1 2
2	Transmit	5 4	5 4

14 T1/PRI Crossover Cable: RJ48C/DA-15

This WAN interface cable is available from Ascend for Pipeline/MAX/Multiband WAN interfaces. Before installing this cable, verify that the WAN transmits on pins 3 and 11

and receives on pins 1 and 9; that is, the opposite of the straight-through cable in section 15..

Pair #	Signal	Male RJ48C	Male DA-15P
1	Receive	1 2	3 11
2	Transmit	5 4	1 9

15 T1/PRI Straight Through: RJ48C/DA

This WAN interface cable is available from Ascend for Pipeline/MAX/Multiband WAN interfaces. Before installing this cable, verify that the WAN transmits on pins 1 and 9 and receives on pins 3 and 11.

Pair #	Signal	Male RJ48C	Male DA-15P
1	Receive	1 2	1 9
2	Transmit	5 4	3 11

16 T1/PRI Straight Through: RJ48C/Bantam

This WAN interface cable is available from Ascend for Pipeline/MAX/Multiband WAN interfaces. The WAN side of the cable connects to dual bantam jacks.

Pair #	Signal	Male RJ48	Male Dual - 310P
1	Receive	1 2	Tip 1 Ring 1
2	Transmit	5 4	Tip 2 Ring 2

17 T1 RJ48C-Loopback Plug

This plug loops the transmit signal back to Pipeline/MAX/Multiband:

Pair #	Signal	Male RJ48C
1	Receive	1 (connects to 5) 2 (connects to 4)
2	Transmit	5 (connects to 1) 4 (connects to 2)

18 T1/PRI Bantam Test Jacks on the Multiband/Pipeline 400

If your Multiband/Pipeline 400 is equipped with bantam jacks, these twelve front-panel bantam jacks give Multiband/Pipeline 400 the capability of monitoring and testing its T1/PRI interface. The following illustration shows two rows of bantam jacks, which appear on Multiband/Pipeline 400's front panel beside the Palmtop port. The left-most six jacks correspond to T1 line #1's interface. If your unit is equipped with a second T1 port, the right-most six jacks correspond to T1 line #2's interface:

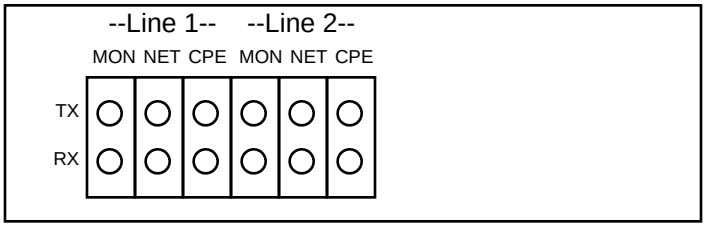

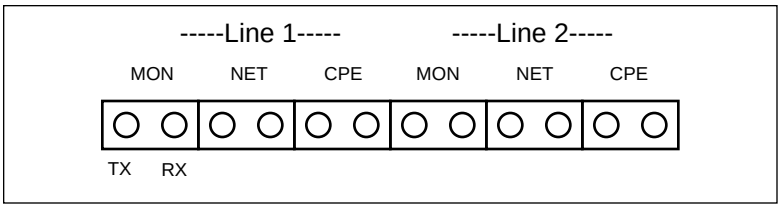

Inserting a bantam plug in the either the NET RX or CPE RX jacks, breaks the T1 signal received from the WAN. Similarly, inserting a plug in either the NET TX or CPE TX plugs, breaks the signal transmitted to the WAN:

- Each monitor jack pair (MON RX & MON TX) allows for passive monitoring of the circuit between the network (T1/PRI Line 1 or Line 2) and the internal CSU (if present) or between the network and the DSX line interface to the Multiband/Pipeline 400.

- Inserting bantam plugs in a network jack pair (NET RX & NET TX) opens the connections to and from the CSU or DSX interface to the Multiband/Pipeline 400, and routes the network transmit and receive interface (T1/PRI Line 1 or Line 2) to the test jacks.

  NOTE: If the unit has an internal CSU, the NET TX jack will bypass the CSU and feed directly into the line. Thus the signal on this test jack should be generated by an external CSU or test equipment that provides the proper signal level.

- Inserting bantam plugs in a CPE jack pair (CPE RX & CPE TX) opens connections to and from the network and routes the Multiband/Pipeline 400's CSU or DSX transmit and receive interfaces (T1/PRI Line 1 and Line 2) to the test jacks.

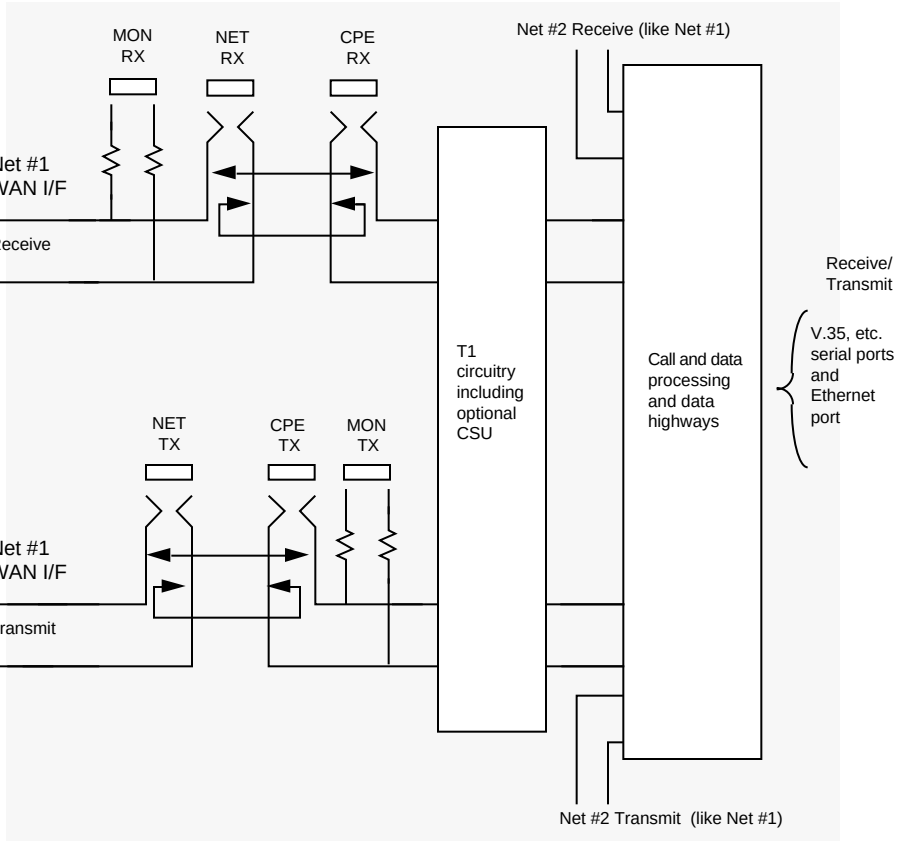

NOTE: These jacks bypass Multiband's internal CSU, and you should provide an external CSU or network-compatible test equipment when supplying a signal through the NET TX jack.