Hybrid Ethernet/SONET Transport Networks

A new model for enduring multiservice optical access infrastructures; delivering high-value Ethernet services over SONET networks

A solution for service providers to leverage their installed base of SONET equipment and build service-rich networks

This white paper addresses:

- Strengths and shortcomings of legacy SONET networks
- Strategies for smoothly upgrading legacy SONET networks with next-generation technology
- Ways to leverage installed equipment base to increase return on investment
- Benefits of Ethernet over SONET service offerings

Lucent Technologies
Bell Labs Innovations



Contents

Abstract 3

Introduction 3

Overview of Optical Access Networks 4

Topologies 4
Network Drivers 5

Multiservice Access Strategies 6

Choices for Network Functional Architectures 6
Realities to Consider for Migrating Established Networks 7

Layered Bandwidth Management Alternatives 7

Limitations of Traditional SONET Architectures 8

Characteristics of Traditional SONET Architectures 8
Data Services Add Cost and Complexity for Carriers 8
Traditional Data Access Services Add Cost and Complexity for the Enterprise 9
Ethernet Services are Complex with Traditional SONET 9

Benefits of Hybrid Ethernet/SONET Network Solutions 9

Network Simplification for Carriers and End Customers 9
Convergence Results in Network Cost Savings for Multiservice Access 10
Improved Efficiency for Service Demand Scalability 10
New Service Opportunities 11

Hybrid Ethernet/SONET from Lucent Technologies 12

Metropolis® DMX Access Multiplexer portfolio 12

Summary 13

Author 14

Abstract

Hybrid Ethernet/SONET solutions offer a sensible evolutionary path for existing multiservice optical access networks to address growing demand for data services. Future-minded carriers can appreciate that Ethernet is going to remain the dominant end-user networking layer for information exchange in the foreseeable future. Ethernet is the dominant Layer-2 protocol for transporting IP traffic in enterprise networks. The end-user appeal of native Ethernet handoffs into the carrier network (due to low-cost and operational simplicity) is a driving force, causing carriers to clamor for Ethernet and Gigabit Ethernet LAN transport solutions. New hybrid Ethernet/SONET solutions allow carriers to extend Ethernet's affordability, simplicity, and efficiency into the wide/metropolitan area network (WAN/MAN), and build on the reliability and scalability of SONET.

Introduction

To remain current, optical access networks need to accommodate a wide variety of protocols and interfaces and their unpredictable growth of demand. Increasingly, multiservice network applications require service offerings that combine voice and data, wideband and broadband, electrical, and optical interfaces. Meeting this challenge requires solutions that support both circuit transport and data traffic growth. SONET networks offer reliable, cost-effective transport of voice and private line services — services that continue to dominate access network revenues today. However, pure SONET networks have difficulty handling the bursty and unpredictable nature of data — particularly Ethernet traffic. Next-generation Ethernet over SONET access network architectures can address these shortcomings.

Access network elements need to offer efficient network solutions that can scale easily in bandwidth and types and numbers of services delivered, to handle increasing data traffic volumes. The most sensible hybrid solutions combine stable Layer-2 aggregation with SONET and optical layer protocols to complement the data service layer and simplify network configurations and operations for carriers and their end customers. Hybrid optical networks should not attempt to eliminate service-layer voice and data switches altogether; the cost and complexity of converged network elements would result in sub-optimization of each layer.

Overview of Optical Access Networks

Topologies

Metropolitan area access networks have a few general characteristics in common. **Figure 1** shows a typical Local Exchange Carrier (LEC) transport network architecture. The network is hierarchical in nature, consisting of a metropolitan core network, subtending access networks, and a variety of "last-mile" feeder networks. The metropolitan area service nodes, typically referred to as Central Offices (COs), commonly contain the service-layer switching functions. Service nodes also provide service-layer grooming for traffic handed off to other LECs, Interexchange Carriers (IXCs), and ISPs. The metro core network provides interconnection among the service nodes in a greater metropolitan area, and between service nodes and handoff points to core network providers. Many metro core network infrastructures are now operating at 10 Gigabits/second (OC-192) or are using Dense Wavelength Division Multiplexing (DWDM) technologies, or both.

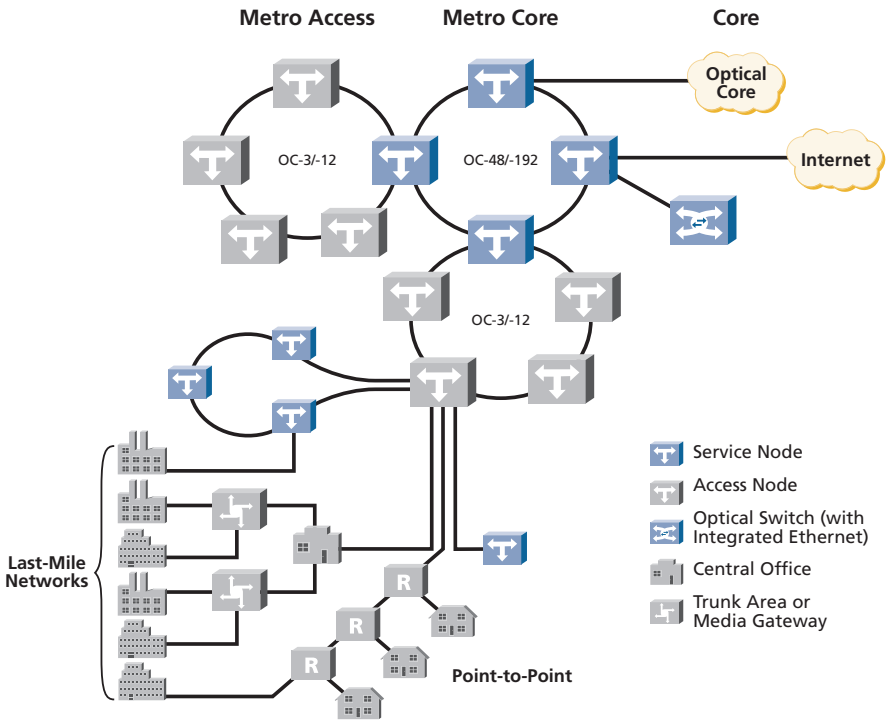

Figure 1: Typical local exchange carrier network architecture.

The access nodes in **Figure 1** provide an intermediate interface and aggregation point for business access traffic and aggregated residential traffic destined for a service node. Access nodes were used to hub traffic to a metropolitan area service node over OC-3 or OC-12 rings in the past. With the declining cost of high-speed optics and the increasing demand for high-capacity services, these rings are quickly migrating to OC-48 and OC-192 SONET rings and, in some cases, to DWDM.

Figure 2 illustrates details of access rings providing data transport for business and aggregated residential customers. Business handoff to the access transport network, often referred to as the WAN interface, is provided by a variety of devices including routers, data switches, and service concentrators.

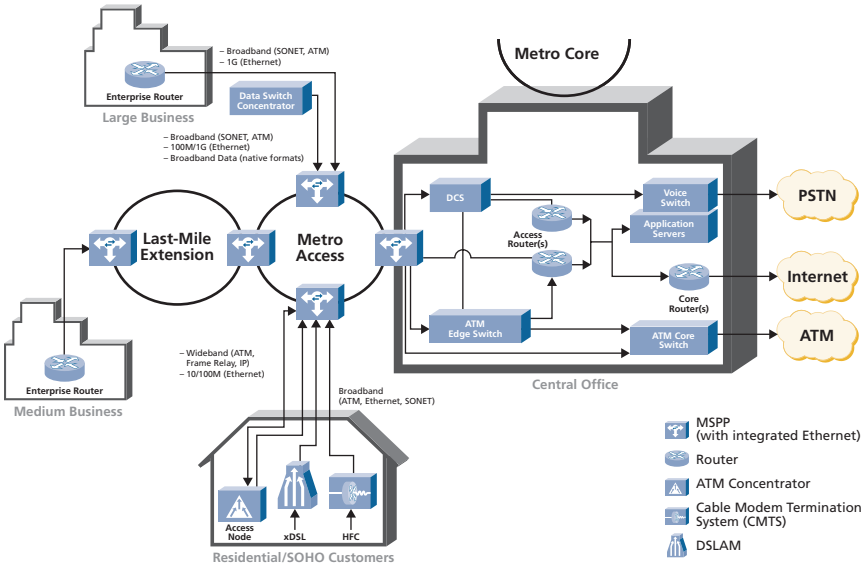

Figure 2: Business data access - range of possibilities (arrows show service ingress)

Network Drivers

A number of character changes in business and data service applications are driving the optical access network infrastructure. One of the primary drivers is the exponential growth of bandwidth due to Internet and intranet communications. Over the past three years, the most common access interface rate for businesses in the U.S. has increased from narrowband DS-0 (56/64Kbps) to wideband DS-1 (1.5Mbps). Along with this shift in median rate, are a greater demand for broadband service interface rates and a decreased need for narrowband interfaces in next-generation access transport solutions. The popularity of broadband last-mile technologies (Digital Subscriber Lines (xDSL) and cable modems) with small businesses and residential users is increasing the access transport demand from remote DSL Access Multiplexers (DSLAMs) and Cable Modem Termination Systems (CMTSs) to the service provider.

In addition to increased bandwidth demand, a shift in the service mix from circuit traffic to packet traffic is well underway. Projected port usage for leased private line services (versus data services) is decreasing over time. The Yankee Group forecasts a nearly 4% annual drop in Business Private Lines from 2003 to 2007[1]. During the next few years, wideband (DS-1) access interfaces for Frame Relay, private line, and Asynchronous Transfer Mode (ATM) services are expected to dominate in the U.S. Significant fiber build out will continue moving closer to end customers, enabling large and medium-sized enterprises to more extensively use optical technologies for low-cost, high-bandwidth access to the transport network. Consequently, broadband service interfaces for private line, ATM, and IP services are experiencing significant growth and redefining

[1] The Yankee Group, North America Business Fixed Line Forecasts (Q2 2003).

the requirements for access transport. In some applications, service aggregation will move closer to the edge and onto the customer premises to accommodate lower-cost data interfaces to the end user. The end-user appeal of having a native Ethernet handoff into the WAN, due to low cost and management simplicity, is a driving force for change. It will cause the current service demand to migrate toward Fast Ethernet and Gigabit Ethernet for WAN transport of IP services.

Multiservice Access Strategies

Choices for Network Functional Architectures

There are a number of choices for performing service delivery, aggregation, and transport in evolving access networks as summarized in **Figure 3**. SONET rings exist in many embedded networks and remain a cost-effective alternative for new deployments, since SONET component prices continue to decrease. Pure SONET solutions are giving way to more data-savvy, integrated hybrid optical access solutions. Combining Layer-2 switching with SONET bandwidth management provides more flexible multiservice optical access.

There are many options regarding where to provide service aggregation and grooming functionality. They include:

- using a shared data edge switch in a service node for customer aggregation among a wide service group
- using distributed Layer-2 and Layer-3 switches in remote access nodes for local service aggregation
- placing service concentrators directly on customer premises

The claim that any one network solution will be the ubiquitous choice for all access applications is unlikely if decisions are economics-based. The winner will be the lowest cost network strategy that meets both current and future network demand projections and offers the required service-level flexibility and functionality with Quality of Service (QoS).

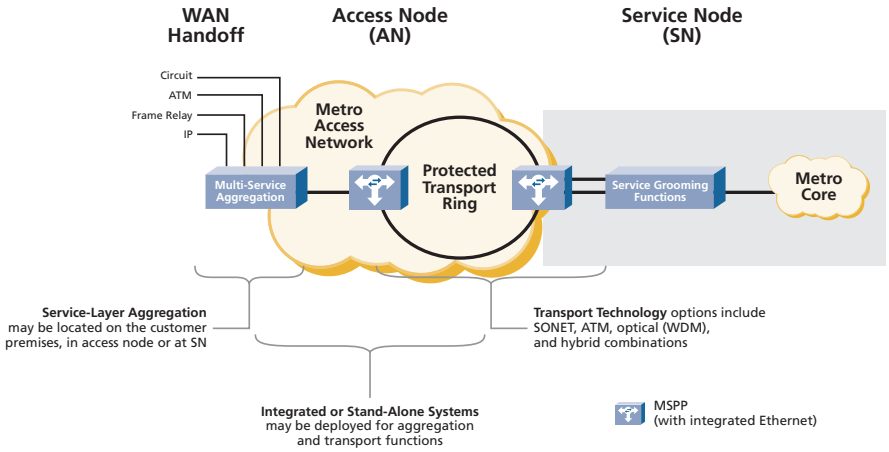

Figure 3: Multiple choices for access aggregation and transport

Realities to Consider for Migrating Established Networks

A number of considerations may influence the network planning decisions for embedded access network evolution. Established service providers want to maximize their return on prior capital expenditures. As a result, new technology deployments must coexist with embedded equipment, driving the industry toward standards-compliant network evolution strategies. Cost-effective management solutions are critical for migrating established networks to new multiservice strategies, as are sensible strategies for continued interworking through the adoption of *only* ratified, industry standard technologies.

Layered Bandwidth Management Alternatives

The most valuable network layering combinations for next-generation multiservice optical networks are shown in **Figure 4**. The increasing number of access service interfaces are categorized into "low-rate" and "high rate". Low-rate service interfaces warrant some level of granular edge aggregation (at Layer-1 or -2) for economical transport to a serving node. By this definition, the low-rate interfaces range from DS-1 up to OC-3, OC-12, and even OC-48; interfaces not traditionally considered low rate.

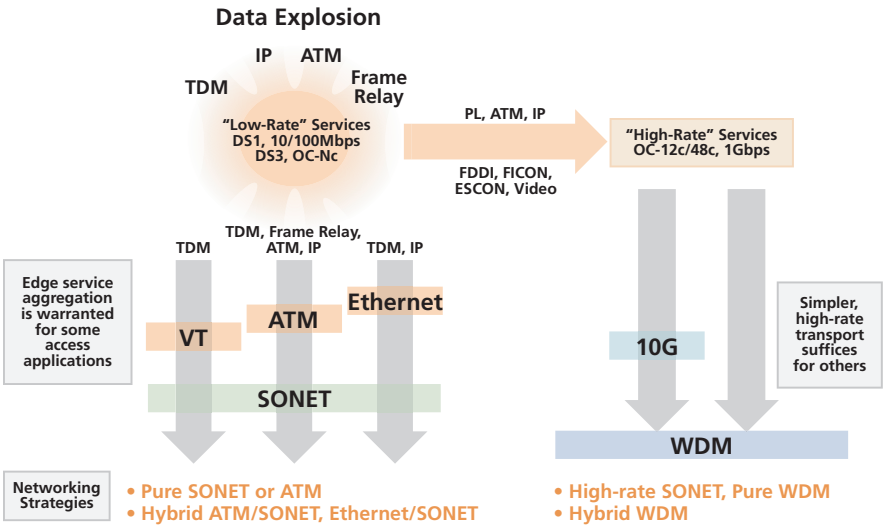

Figure 4: Network layering strategies for multi-service optical access

The networking choices for low-rate multiservice access are SONET, ATM, and the multiservice hybrid variants of ATM/SONET and Ethernet/SONET (see left side of Figure 4). In some applications, WDM provides more scalability or flexibility when combined with one or more of these low-rate strategies in an access loop.

The right side of Figure 4 shows that high-rate SONET (10Gbps) and pure WDM provide viable access transport architecture for cost-effectively transporting an emerging class of high-rate private line and data services. Service interface rates starting at 622Mbps require an access technology that offers lower cost per-bit solutions than past-generation SONET equipment. These high-rate interfaces may lend themselves to simple 10Gbps SONET solutions or direct WDM transport without the added expense of complex aggregation in the access node.

Most metro access networking architectures are built (to some degree) on the strength of the SONET layer. The pervasiveness of SONET networking is undeniable. Billions of dollars have been invested in networking infrastructure and service providers know and trust SONET's reliability and ease of management. SONET components are approaching commodity price levels; so complete SONET elimination does not provide economic benefits in most multiservice access applications. At the same time, these low-cost components enable the industry to innovate new data-centric network architectures built on top of SONET reliability rather than replacing it.

Limitations of Traditional SONET Architectures

Characteristics of Traditional SONET Architectures

The traditional access network architecture (**Figure 5**) is built with pure SONET multiplexers. This circuit-based transport solution relies on SONET Unidirectional Path Switched Rings (UPSR) to protect traffic in the event of a network failure such as a fiber cut.

The SONET multiplexer in Figure 5 contains a SONET Add/Drop Multiplexer (ADM) that performs TDM aggregation and transport for both circuit and data interfaces. SONET multiplexing continues to offer low-cost solutions for voice and private line traffic, but due to its inflexibility for data applications resulting from fixed bandwidth allocations, this may not provide the lowest total network cost as the multiservice mix shifts to data.

In pure SONET access architectures, the data payload is not adapted in the SONET multiplexer. Instead, the data handoffs to the WAN must use optical interfaces to be compatible with traditional SONET ADMs. The ADM maps the full user bandwidth into a SONET tributary for backhaul to a service node without statistical aggregation in the access node. The SONET cross-connect function in the access node does provide some level of aggregation, but only at the discrete granularities that SONET supports.

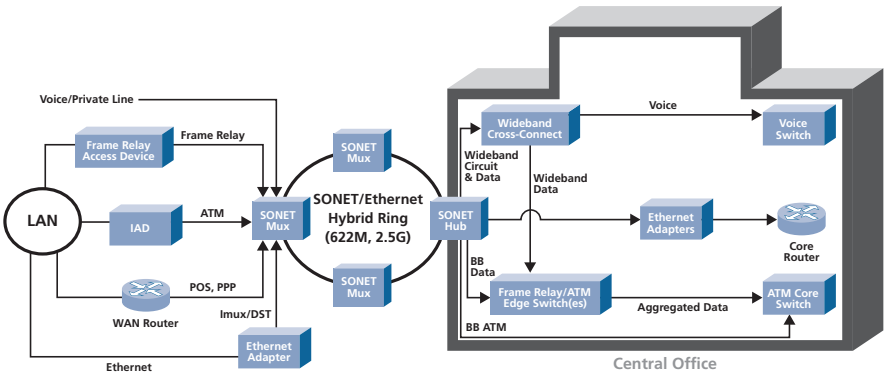

Figure 5: Traditional SONET access functional architecture

Data Services Add Cost and Complexity for Carriers

Ethernet has won the battle for ubiquity in the enterprise LAN. Ethernet is reliable and cost-effective, and network administrators are very familiar with the protocol. Because Ethernet interfaces do not map directly into SONET tributaries, enterprise customers have come to use Frame Relay,

ATM, Packet-over-SONET (PoS), and Point-to-Point Protocol (PPP) handoffs that are compatible with traditional SONET interfaces (DS-1, DS-3, OC-3, and others). In the service node, Frame Relay and ATM access services, which had been transported through the access network on TDM pipes, are handed off to edge data switches or access routers for statistical aggregation and service-layer grooming. This ensures that costly ports on carrier-class core ATM switches and routers are used efficiently, which enables core network scalability. The edge switches and routers in the service node are shared among a number of access rings and cost-effectively combine moderate levels of data services. However, exponential increases in data access cause this two-step (edge, core) aggregation architecture to quickly become unmanageable.

Traditional Data Access Services Add Cost and Complexity for the Enterprise

Separate mapping devices are also needed in the enterprise LAN network to provide WAN interfaces using PoS, PPP, Frame Relay, or ATM protocols. For this purpose, Frame Relay Access Devices (FRADs), ATM integrated access devices (IADs), or routers may be used to enable IP WAN handoffs. This additional complexity is undesirable for network administrators who are most comfortable with Ethernet.

Ethernet Services are Complex with Traditional SONET

In some cases, enterprise customers do use Ethernet interfaces to the WAN, but this just moves the burden of adaptation to service providers. In some cases, service providers offer native Ethernet services by adding separate adaptation devices that map 10 Mbps Ethernet signals onto DS-1s (shown in Figure 5) using inverse multiplexing (Imux) techniques. Typically these solutions significantly reduce bandwidth to the Ethernet client. Another option for service providers to accommodate Ethernet handoffs is adding a data switch (with an ATM or PoS uplink) at the network edge. Unfortunately, this adds cost and complexity to the network.

Benefits of Hybrid Ethernet/SONET Network Solutions

Network Simplification for Carriers and End Customers

The result of layer integration on the network design is shown in **Figure 6**. The Ethernet/SONET hybrid offer provides a simpler and more scalable carrier network solution. It allows graceful evolution from optical transport services to Ethernet service delivery that can keep pace with exponential data growth. The Ethernet/SONET layer convergence eliminates many of the intermediate edge protocols (ATM, Frame Relay, and PPP) used for adaptation and aggregation of native LAN traffic in traditional SONET solutions.

In other words, direct Ethernet handoffs from enterprise customers into the WAN allow them to eliminate FRADs, routers, or ATM switches and to vastly simplify their network operations.

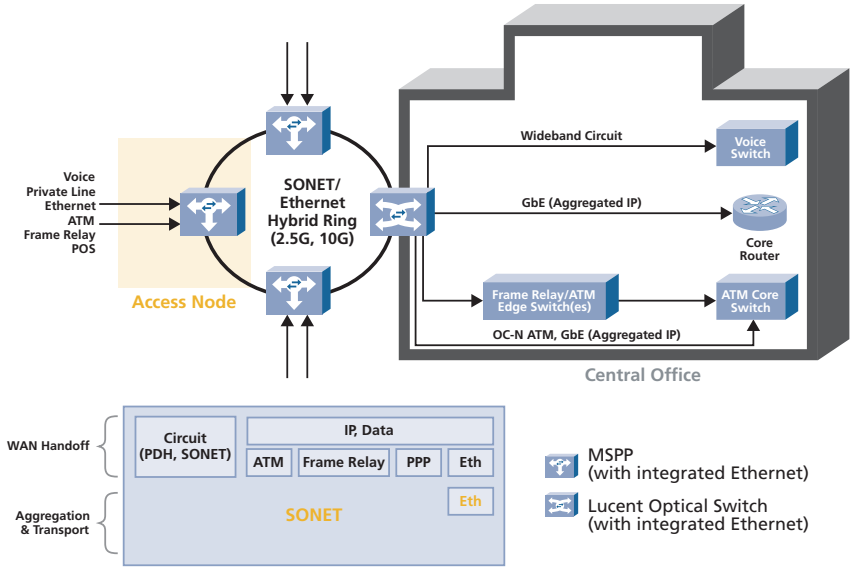

Figure 6: Hybrid Ethernet/SONET access functional architecture

Convergence Results in Network Cost Savings for Multiservice Access

The Ethernet/SONET solution combines familiar and affordable data (Ethernet) and transport (SONET) technologies into a single network element. The consolidation of data/transport functionality offers lower cost infrastructures by eliminating edge aggregation switches/routers at customer premises and in data centers. It also provides interface cost savings between distinct network elements.

Improved Efficiency for Service Demand Scalability

Ethernet-enhanced SONET networking combines direct Ethernet WAN interfaces with statistical aggregation and more granular transport mappings to help eliminate network inefficiencies typically associated with traditional data-over-SONET solutions. Integrating Ethernet aggregation into SONET multiplexers enables efficient transport for the explosion of IP services from enterprise sites or data center to core routers. Further, it does so without compromising the benefits of SONET reliability for voice and private line applications. Native Ethernet-over-SONET mappings offer better bandwidth efficiency for IP transport than other technology alternatives. Flexible SONET mappings allow Ethernet streams to be mapped into custom-sized transport containers using virtual concatenation of SONET tributaries. This mapping has greater scalability and is compliant with standard SONET networks that may be encountered as services traverse core networks.

New Service Opportunities

Full line speed Ethernet and Gigabit Ethernet services help alleviate bandwidth bottlenecks between the enterprise and the core network. Ethernet service opportunities are highlighted in **Figure 7** and include business-to-business LAN interconnect using Virtual LANs (VLANs), statistical access to ISPs, Voice-over IP (VoIP) transport, and ASP interconnection to data centers for Web hosting and infrastructure services. Hybrid Ethernet optical transport can also be used to offer cable access transport with the added potential to offer high-revenue private line services. While legacy Frame Relay and ATM clients will remain, the ability to migrate new customers to IP/Ethernet transport services vastly simplifies networking.

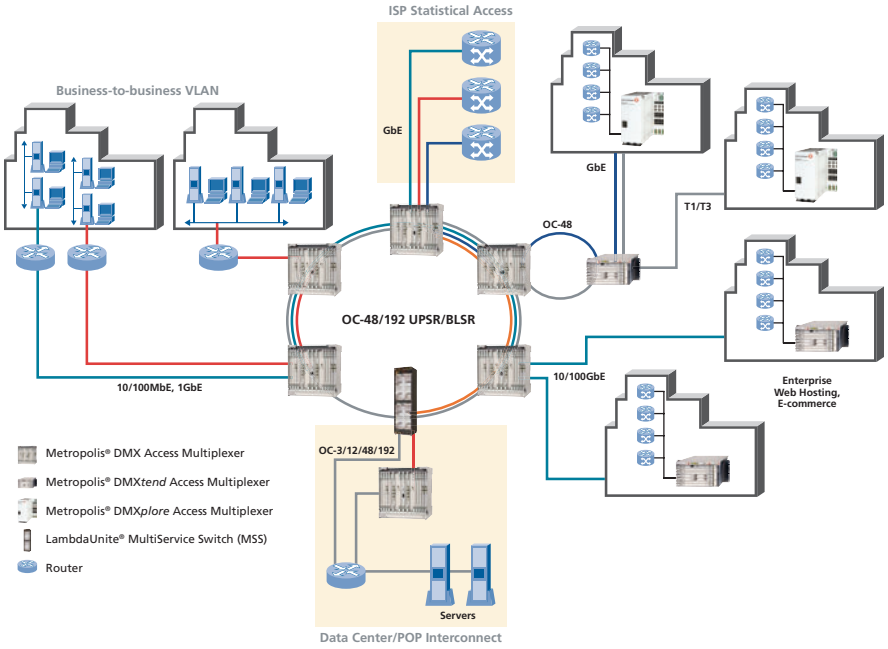

Figure 7: New Ethernet service opportunities for the metro optical network

The Ethernet/SONET hybrid solution offers several QoS alternatives that enable various service grades. Clients can subscribe to dedicated TDM, for Ethernet transport requiring private-line-quality services with the affordability and operations simplicity of Ethernet handoffs to the WAN. Service providers can offer statistically shared bandwidth services with various levels of over-subscription, from economy class to premier. They also can provide simple “best effort” transport using statistical multiplexing to oversubscribe the transport bandwidth, extending the Internet-QoS paradigm to the end customer. Alternatively, guarantees based on Ethernet Committed Information Rate (CIR) or Peak Information Rate (PIR) can be imposed to offer various new classes of service or SLAs.

The Ethernet/SONET architecture can support a range of protection strategies. These include traditional SONET UPSR or BLSR protection, Ethernet-layer spanning tree protection, Ethernet link aggregation, or conventional IP-layer network protection.

Metropolis® DMX Access Multiplexer portfolio

The Metropolis® DMX multiservice access multiplexers are designed to be highly flexible and scalable, and protect against network evolution uncertainties. As a hybrid Ethernet/SONET service platform, the Metropolis® DMX enables multiservice growth from traditional voice and private line services into new Ethernet services with improved data networking efficiency for the burgeoning IP generation.

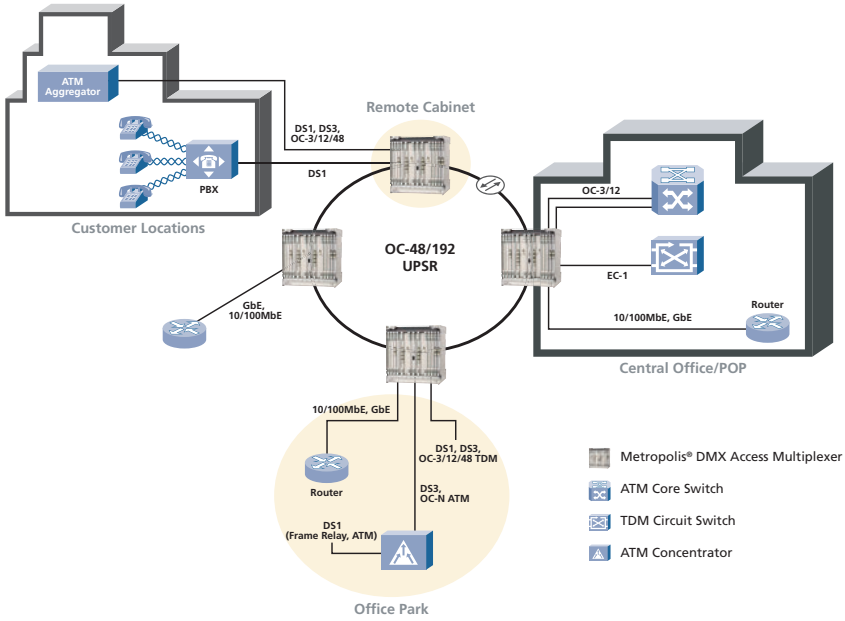

Figure 8: Multiservice Optical Access Flexibility

The Metropolis® DMX portfolio supports high-speed networks from OC-3 all the way through OC-192 with a broad range of tributary interfaces from DS-1 through OC-48, including Ethernet, Fast Ethernet, and full-rate Gigabit Ethernet services (Figure 8). The Metropolis® DMX reduces footprint and power consumption by integrating SONET multiplexing, wideband/broadband cross-connecting, and Ethernet switching in one compact network element. It's the best of both worlds — TDM and Ethernet functions in a single box — offering smooth, low-cost migration toward simplified optical networks. Available in a wide range of forms, the Metropolis® DMX products can suit various application environments while minimizing capital expenditures. Plus, the Navis® Optical Management System can be added to create a complete metro optical solution that integrates TDM and Ethernet management into a single system.

By combining Ethernet aggregation with flexible SONET bandwidth allocation, the Metropolis® DMX hybrid Ethernet/SONET implementation provides a flexible way to address SONET's granularity limitations. A single Metropolis® DMX Ethernet service card can simultaneously satisfy various QoS requirements, offering reliable data throughput for high-availability services plus statistical "Internet-quality" transport. Data oversubscription allows service providers to improve fiber utilization while increasing revenue from burstable IP transport services. Flexible Ethernet-over-SONET mapping allows transport pipes to be flexibly allocated in 1.5Mbps or 50Mbps increments up to full Gigabit Ethernet line speeds. The results are reliable network solutions built for data efficiency, but fully interoperable with any standard SONET network.

The Metropolis® DMX portfolio includes:

- Metropolis® DMX Access Multiplexer – central office and large enterprise applications
- Metropolis® DMX*press* – customer premises applications
- Metropolis® DMX*tend* – enterprise and loop access applications
- Metropolis® DMX*plore* – economical next-generation SONET services delivery right to the customer's premises

All provide compatible next-generation SONET functionality and serve as integrated Ethernet over SONET metro platforms. When used together, the products create a comprehensive solution that allows service providers to offer faster, more sophisticated services while lowering operating costs. For more information about the Metropolis® DMX portfolio visit: http://www.lucent.com/dmx.

Summary

Service providers need a variety of multiservice optical access strategies to address the broad range of MAN applications that exist today and will continue to evolve into the future. Next-generation Ethernet/SONET access networking optimizes MANs for evolution from TDM services toward IP-ready infrastructures. The simplicity of the Ethernet and SONET layers makes this hybrid solution well suited for service providers wanting to simplify network infrastructures and operations — for both themselves and for their enterprise customers — while maintaining a reliable multiservice optical access network.

The Lucent Technologies Metropolis® DMX portfolio offers a well-balanced mix of trusted SONET products with ubiquitous Ethernet functionality. They allow networks to become data-savvy without compromising carrier-class reliability for voice, private line, and premier data services. The ability to offer enhanced Ethernet services helps service providers to differentiate themselves with new, cost-effective WAN transport services that are desirable alternatives to private line, frame relay, and ATM transport.

Author

Richard Goode
Senior Product Marketing Manager, Optical Networking Group

Rich Goode is responsible for product and portfolio positioning of the Metropolis® DMX Access Multiplexer multiservice product line. With more than 10 years of experience in telecommunications, Goode previously held marketing and program management positions with Nortel, Bay Networks and GTE. Goode holds a B.S. in management from the University of Massachusetts and an M.B.A. from Nichols College.

Please note:

If you enjoyed this publication and are interested in our other White Papers, please visit the Lucent Technologies web site at http://www.lucent.com (Select Products and Services, then select Resource library, then under White Papers, select View all.) for a complete listing of currently available titles.

To learn more about our comprehensive portfolio, please contact your Lucent Technologies Sales Representative or call 1-888-426-2252.

Visit our web site at http://www.lucent.com.

This document is for planning purposes only, and is not intended to create, modify or supplement any Lucent Technologies specifications or warranties relating to these products or services. Information and/or technical specifications supplied within this document does not waive (directly or indirectly) any rights or licenses – including but not limited to patents or other protective rights – of Lucent Technologies or others.

Metropolis, LambdaUnite and Navis are registered trademarks of Lucent Technologies Inc.

Copyright © 2004 Lucent Technologies Inc.
All rights reserved
Lucent Technologies Inc.

ONG v2.0304

Lucent Technologies
Bell Labs Innovations

