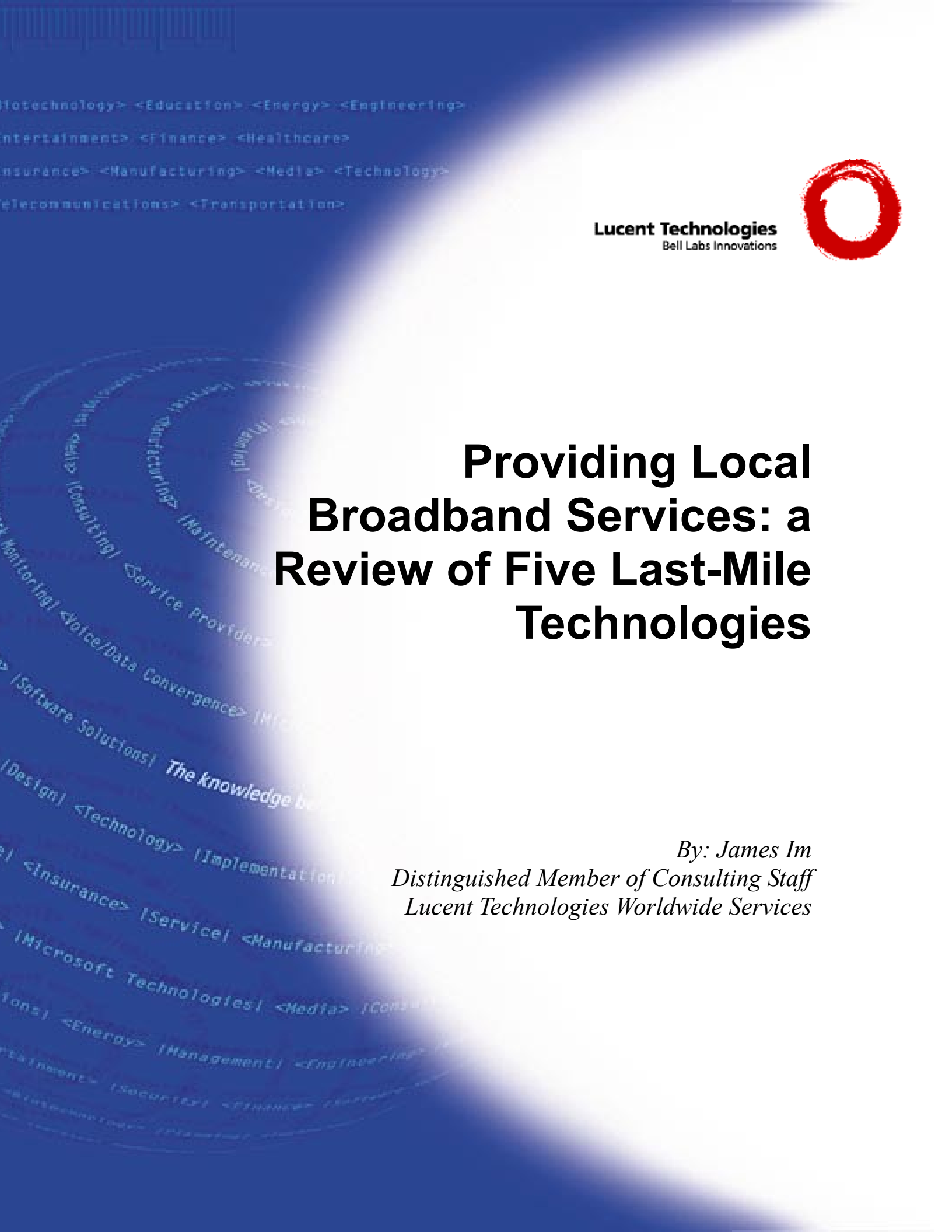

Providing Local Broadband Services: a Review of Five Last-Mile Technologies

By: James Im
Distinguished Member of Consulting Staff
Lucent Technologies Worldwide Services

Lucent Technologies
Bell Labs Innovations

Providing Local Broadband Services: a Review of Five Last-Mile Technologies

By James Im, DMCS

Introduction

The convergence of voice, video, and data networks has created both opportunities and threats for service providers. Combined with deregulation, convergence has created a market in which broadcasters, satellite companies, cable companies, telecom carriers, Internet Service Providers (ISPs), and vertical service providers are all looking to provide integrated services and faster access to consumers and businesses.

This potential for integrated services is the springboard for the increasing market penetration of broadband technologies. Market watchers project that by 2010, most homes and small businesses will have access to broadband technologies in the range of 10 Mbps, as shown in Figure 1.

Figure 1: End User Bandwidth Projections

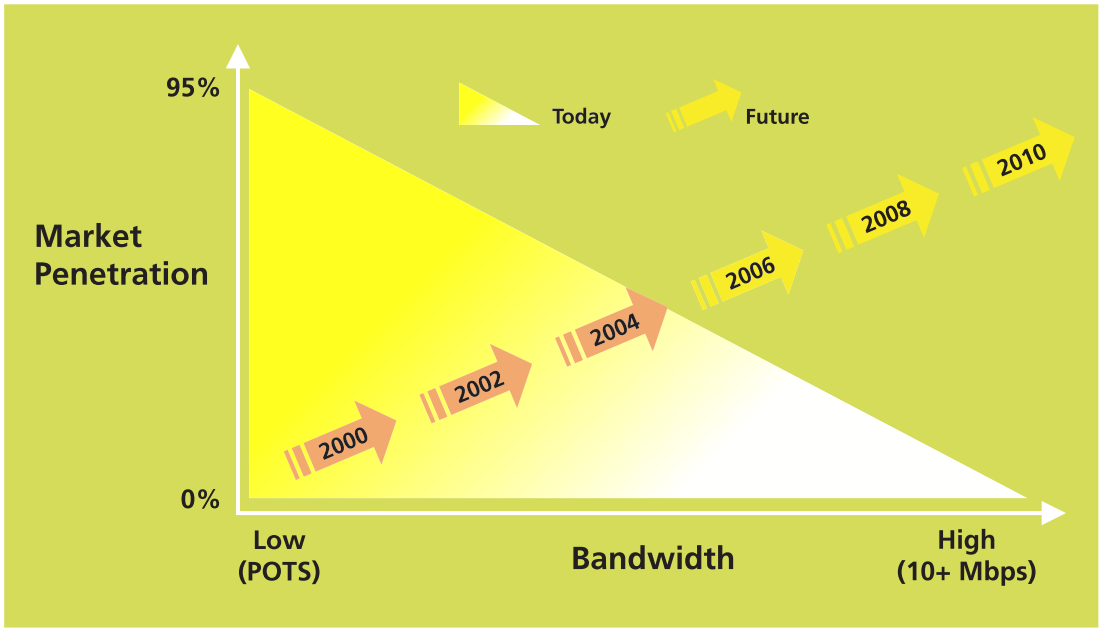

The “last mile,” which is the connection between the customer and the access provider, is considered by many to be the bandwidth bottleneck standing between current and future broadband services, such as switched voice, high-speed data services, and high-speed Internet access. The telecommunications industry is in the process of overcoming that bottleneck by extending their broadband infrastructure to the customer premises to provide fast local access. This white paper presents a market perspective on five principal technologies available to bring this broadband infrastructure and greater bandwidth to customers’ premises:

- Digital subscriber lines (DSL)
- Hybrid fiber/coax (HFC)
- Power Line Telecommunications (PLT)
- Fiber access
- Fixed wireless

Figure 2: Last Mile Alternatives

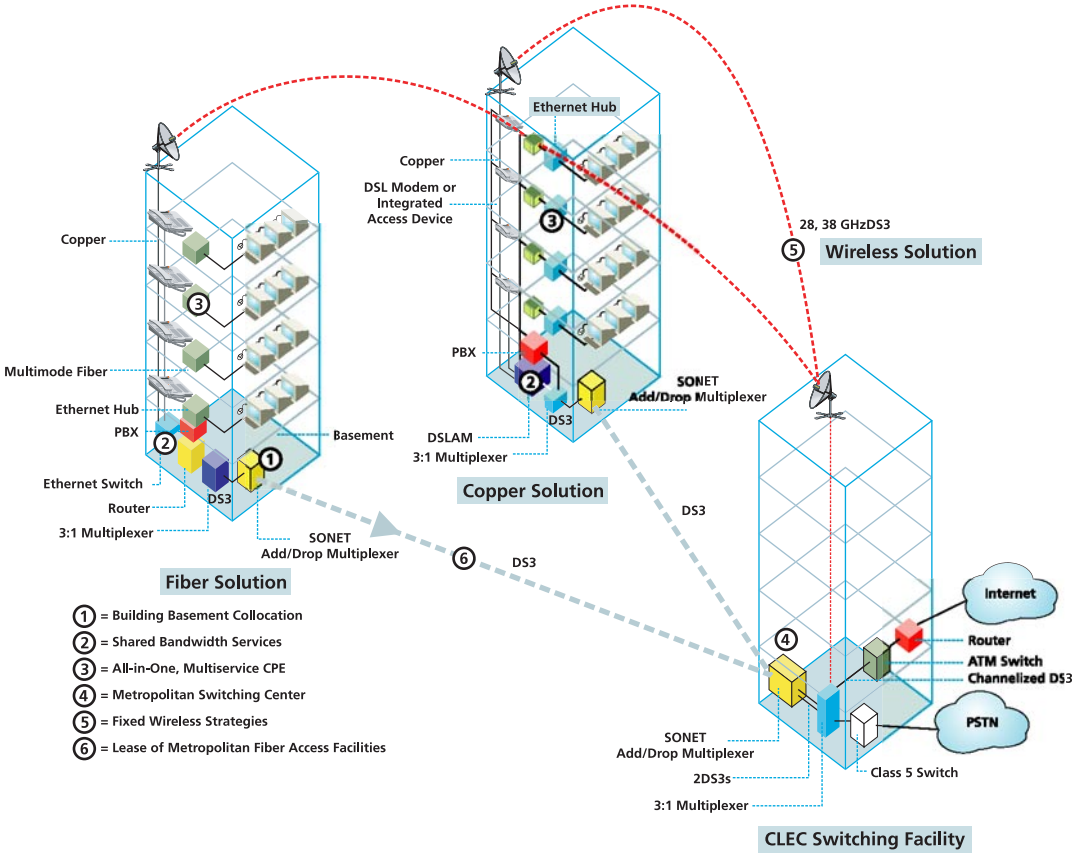

Burgeoning Broadband Opportunity

Antiquated business models and services are no longer enough to retain current revenues or capture new business or consumer spending. Traditional service providers have to redefine themselves to stay alive in this new century of communications. Broadband services and the infrastructure to deliver them offer these competitors new ways to evolve their business models to retain current clients as well as win new customers.

As deregulation has lowered barriers to entry, the flood gates have been opened to new entrants from a variety of backgrounds, including wireless, cable, long-distance carriers, local carriers, data providers, and new start-ups. Service providers, in particular, are quickly offering their customers nearly every delivery mechanism—from telecom to cable to satellite to cellular. By installing Voice-over-Internet-Protocol (VoIP) gateways, ISPs can be transformed into voice carriers. Broadband infrastructure deployment enables all of these new entrants to integrate video services into their product mixes as well.

Clearly, broadband and IP together are playing a primary role in increasing competition and further lowering barriers to entry. By decreasing the cost of communications, IP allows new entrants to immediately differentiate on price. However, service providers building next-generation broadband services must extend this differentiation by leveraging the flexibility of their networks to deliver a host of new applications.

Increased residential and business demand for faster Internet connections has resulted in huge incremental revenue opportunities for Broadband Access providers. Telephone and cable companies are competing for dominance by providing users with a faster connection to the Internet, and positioning themselves for future service applications through increased bandwidth. The Yankee Group's annual Technologically Advanced Family (TAF)® Survey asked households with personal computers about their levels of interest in high-speed Internet access. As shown in Figure 3, more than 60 percent of PC users polled are interested in faster access.

Figure 3: PC Households' Interest in High-Speed Internet

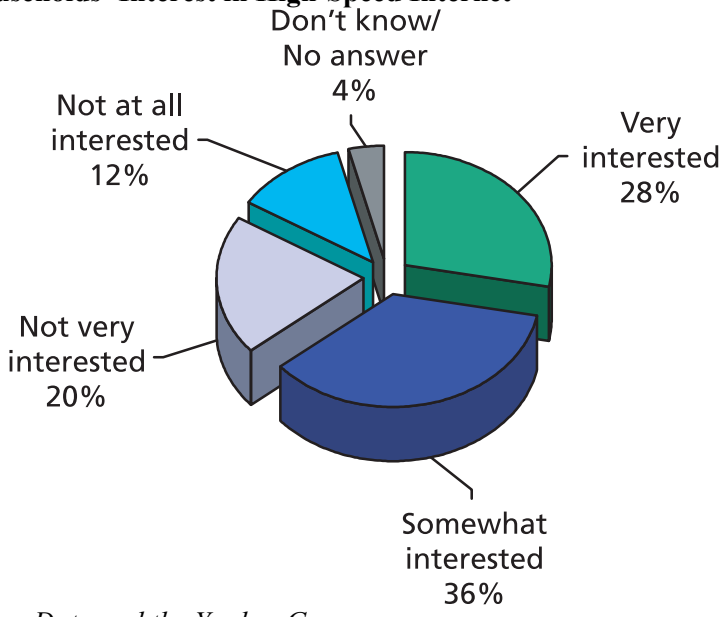

Source: TAF Survey Data and the Yankee Group

Value-Added Services

High-speed access enables a variety of value-added, high-data-rate (HDR) services, such as "Always On" high-speed Internet access, enhanced online gaming, personal videoconferencing, online shopping and banking, Virtual Private Network (VPN) telecommuting, and entertainment-on-demand. The early success of these HDR services, coupled with increased consumer interest, promises to produce many new subscribers, increasing the subscriber base for access providers to an estimated twenty million by 2003 according to IDG.

Access providers are equally excited about the potential to deliver IP-based telephony service over the same infrastructure. Early service rollouts by several major Multiple System Operators (MSOs) have achieved 20 percent penetration rates based on today's circuit-switched technology. Conservative estimates project an incremental revenue opportunity for IP telephony to reach over $7 billion in the U.S. alone by 2005 according to IDG.

The integration of voice and data service delivery will soon become the norm, and end users will demand these advanced services at costs far below today's offerings from incumbent service providers. To become a viable alternative to incumbent service providers, operators will be required to offer businesses Service Level Agreements (SLAs), and will need to construct networks that are reliable, highly scalable, and optimized to deliver high-speed data, telephony service, and Quality of Service (QoS) guarantees to many subscribers simultaneously. Unfortunately, most of today's access equipment is not capable of handling the requirements and challenges of tomorrow's networks.

To ensure a competitive position in the marketplace, access providers must begin planning now to provide the framework for next-generation applications and new HDR capabilities.

Last Mile Technologies

Digital Subscriber Lines (DSL)

DSL provides each user with a high-bandwidth, dedicated line for Internet access. The dedicated line provides smooth traveling down the information superhighway as compared to the frequent potholes (busy signals) and traffic jams (line unavailable for telephone and fax calls) encountered with dial-up modems.

DSL technology utilizes existing twisted-pair copper wires to connect to the Internet via telephone lines (Figure 4). DSL squeezes greater capacity out of copper wires by turning unused frequencies into high-speed digital pipes. The utilization of unused frequencies on the copper wires eliminates interference with telephone service, enabling users to simultaneously make use of the telephone and transmit faxes while online.

Figure 4: Lucent DSL Network Architecture

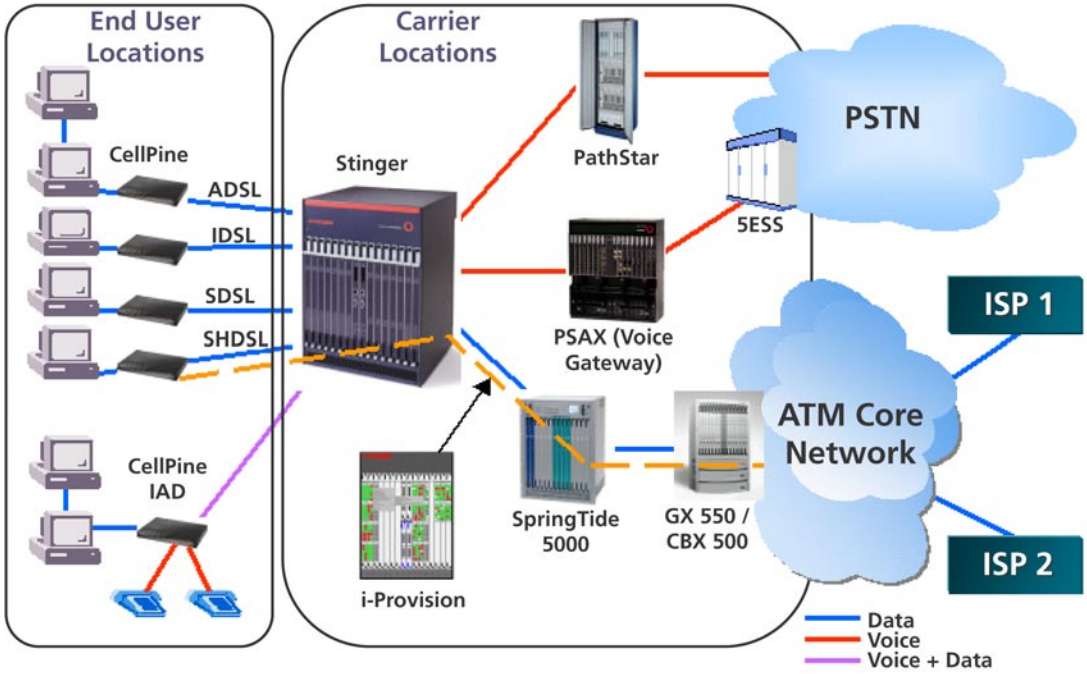

Incumbent local exchange carriers (ILECs), competitive local exchange carriers (CLECs), and ISPs are all deploying DSL because it maximizes the existing copper infrastructure to transmit high-speed data. The ability of DSL to carry high-speed data and voice traffic simultaneously makes it the primary competitor to high-speed Internet access over cable TV lines for consumers. It can also provide small and medium size businesses and small office/home office (SOHO) customers with a lower cost alternative to T1 for high-speed data.

DSL technological restrictions currently prevent it from working on digital loop carriers (DLCs) or loops longer than 18,000 feet. DLC usage varies among carriers, but approximately 35 percent of telephone lines in the United States function on DLC, thereby restricting consumer access to DSL. New technologies are being developed to overcome the connection barrier posed by DLC. Converters and similar devices are being designed to reuse the existing network infrastructure. Such components would be installed in DLC cabinets, minimizing the cost of labor for upgrading the entire network.

Many ILECs that have invested large amounts of capital in the T1 market for large and medium size businesses are concerned that DSL will erode that market. T1 lines provide equivalent upstream and downstream speed, while DSL is generally configured to provide higher downstream speed than upstream. This differential makes DSL a suitable choice for the consumer and small business markets that do not require the symmetrical transport capacity of T1s. However, ILECs can reap the rewards of both T1 and DSL by targeting the services at each market.

Hybrid Fiber/Coax (HFC)

Hybrid fiber/coax networks are taking center stage in the cable industry. HFC uses optical fiber to carry video and telephony from the headend or central office to an optical node (Figure 5). The "last mile" connection is completed with existing coax cable. High-speed Internet access is provided through a cable modem at the customer's premises, which connects to an Ethernet card in the computer.

Figure 5: HFC Network Architecture

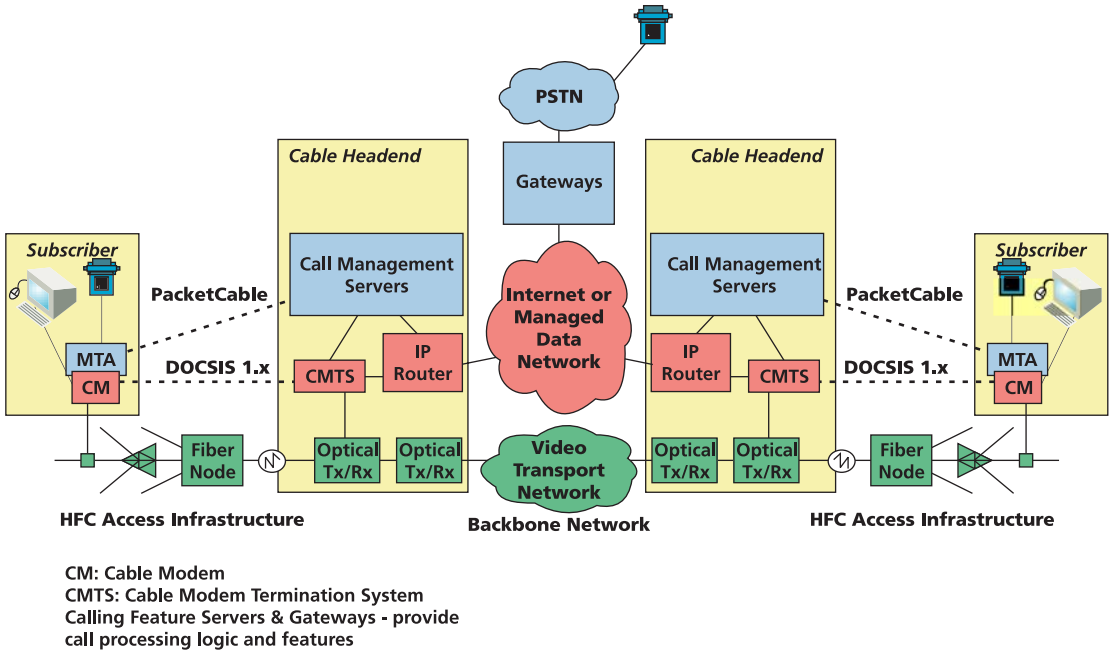

HFC is favored by the cable industry for the same reason DSL is preferred by the telephone industry; it leverages the existing infrastructure to provide a cost-effective solution to meet consumer demand for high-speed applications. HFC supports many existing network technologies, including ATM, SONET, frame relay, and switched multimegabit data services (SMDS), and is upgradable for future technologies and applications.

While similar in some respects to a traditional analog modem, a cable modem is significantly more powerful; it is capable of delivering data an average of 50 times faster than a 56-Kbps dial-up modem. In addition to speed, cable modems have an advantage over dial-up modems because they provide always-on Internet access and the ability to have Internet access on multiple computers in the same home or office. Therefore, consumers can simultaneously use the Internet, telephone, and cable television service.

The primary downside of cable modem service is that the cable is shared. Both upstream and downstream access speeds are compromised as multiple users share the same bandwidth. The degradation of service would be most noticeable when users are on the cable data network using applications requiring high bandwidth, such as video or music.

At year-end 2000, AT&T led all cable modem providers with 1,082,000 subscribers, followed by Time Warner with 946,000 subscribers and, after a sizeable gap, Cox with 481,947 subscribers. While the 3.7 million cable modem subscribers in the United States represent only about 4 percent of the total number of households passed by the top MSOs, the penetration rate among households with access to cable modem service was about 6 percent at year-end 2000.

High-speed access over cable is primarily a residential product. Cable modems are better suited for the residential than business markets, as most homes are already equipped with a cable connection. It is not necessary to be a cable television subscriber to utilize a cable modem. While cable modems do provide always-on data connections, the variations in speed dependent on the number of simultaneous users would also be more noticeable to data-intensive business users.

Power Line Telecommunications (PLT)

PLT is a technology alternative that will allow service providers to carry symmetrical, broadband telecommunications traffic over existing electric distribution infrastructures without the need to install new networks. PLT can carry 1 megabit per second (Mbps) and higher telecommunications bandwidth. Additionally, it is entirely symmetrical, which means that the upstream speed is also 1 Mbps and higher. This makes PLT one of the fastest and most efficient broadband technologies for the last mile.

Additionally, PLT is a very attractive means for electric distribution companies that own the networks to get into telecommunications. It is also a lower-cost means for new service providers to partner with electricity distributors, or lease the facilities that they need to compete.

The most commonly discussed PLT system is based on development done by Nor.web Communications. Nor.web was formed as a joint venture between Nortel Networks and United Utilities in Manchester, UK. PLT technology starts with an existing electric distribution network. An electronic base station is installed on the customer side of the transformer, where the electrical signals have already been converted to low voltage (Figure 6). The base station performs two key functions. First, it interfaces with communications service provider networks that connect to Internet gateways, the PSTN, cable headends, and other content originators. Second, it injects telecommunications data into the electrical network.

Data is then carried to a coupling at the customer premises (usually at the electric meter) that converts the signal for transmission over a coaxial cable into the home or business. The signal then travels through the internal wiring system to a piece of customer-premises equipment (CPE) called the communications module, which converts the signal again to an analog format readable by the end user's PC, telephone, TV, or other appliance.

Other developers, such as DS2 in Spain and Veba in Germany, are also developing PLT solutions using similar architectures. Because of the way the technology has developed, PLT has received much more interest in Europe than in North America. The primary reason has to do with the way that the electric grids are constructed. In Europe, end customers use electrical currents at 220-240 volts, while in North America, lower voltage current (110-120 volts) is used. Higher voltage throughput means that the power can travel farther from the transformer, and thus one transformer can serve more end users. In the PLT context, this means that fewer base stations are required to serve a given market in Europe than one in North America, and therefore, buildout costs are lower.

Figure 6: Power Line Telecommunications Technology

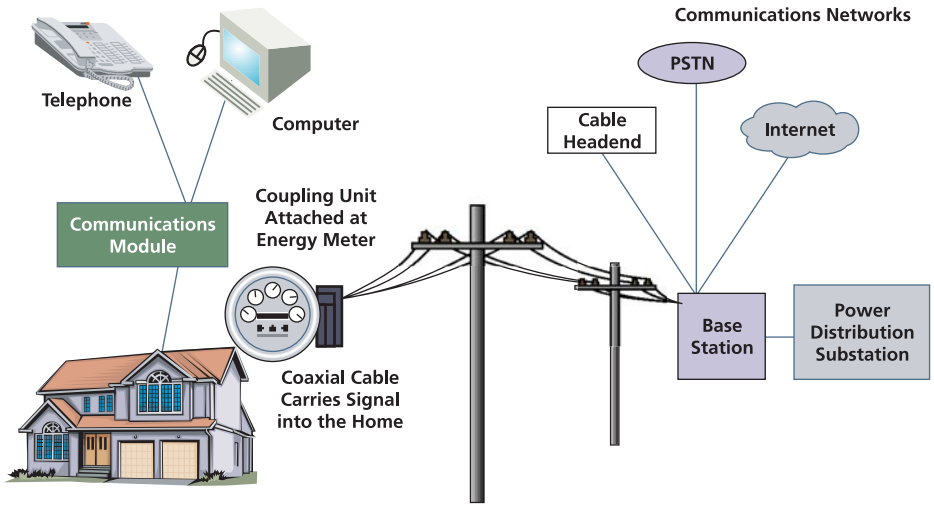

Powerline Carrier injects high-frequency spread spectrum signals into the secondary level of the power distribution system to achieve always-on, symmetrical communications for Internet, voice, and video communications.

Fiber Access

The main attraction of fiber access is speed—one single-mode fiber can carry light at distances up to 70km, while phone wires have a maximum reach of 5km. Fiber offers speeds of 10Mbps to 100Mbps—significantly faster than ADSL or CATV via hybrid fiber coax (HFC).

The widespread use of fiber, however, has been hindered by several factors. First, until recently, it was prohibitively expensive due to the costs of installation and amplification. In the initial trials of fiber systems in the early 1990s, installation ended up costing more than was justified by earned revenues.

Second, fiber-to-the-home requires devices to connect to home appliances because fiber delivers light energy, while appliances run on electrical energy.

Changing economics of the fiber component industry are quickly eliminating barriers to fiber access. New technologies such as erbium-doped amplifiers significantly reduce the cost of amplification. Optical-electrical translation is simpler and cheaper through the use of optical network units (ONUs) on or near the customer premises. Even more significantly, passive optical networks (PONs) allow fiber to be shared across a group of users, thus reducing the cost per user. As there are no active components from the central office (CO) to the end user, network maintenance is simpler and less costly. An additional advantage of PONs is that when the end user requires increased speed, the end-point equipment is the only part of the connection that needs upgrading—the basic infrastructure remains intact.

In order to promote PON standardization, a worldwide group of operators and equipment vendors joined together in 1995 to form the Full Service Access Network (FSAN) initiative. FSAN is

working to promote ATM-based PONs, which have been accepted by the International Telecommunications Union (ITU) and European Telecommunications Standards Institute (ETSI) and are being adopted by established vendors and start-ups (SUs) alike. Since standardization offers interoperability, service providers are now able to choose their PON providers from a growing array of established vendors and SUs. This competition will help to make PONs—and thus fiber access—more affordable to end users and more profitable for service providers.

There are three main types of fiber access: fiber to the curb (FTTC), fiber to the building (FTTB), and fiber to the home (FTTH). Each addresses differences in demographics, physical infrastructure, and end-user demands.

FSAN offers bi-directional speeds of 155Mbps, while with FTTC and FTTB, the downstream bit rate can be increased to as much as 622Mbps, with bandwidth shared among 16 to 32 ONUs.

Fiber-to-the Curb

FTTC brings the optical fiber close to the home or business. The fiber runs from the carrier presence to an ONU, generally within a few hundred meters of the subscriber. The ONU couples it with the copper wire connected to end-user premises. At the home, an optical electric converter (OEC) converts the optical signal to an electrical signal.

Fiber-to-the-Building

FTTB moves the fiber closer to the end user than FTTC. The ONU is located in the office or apartment buildings, which are grouped in a category known as *multiple-dwelling units* (MDUs). The owner of the MDU property commonly pays for ONU installation and connection to each apartment or office in the building, then adds a premium to each tenant's rent to recoup the installation cost. The individual units are connected to the ONU via metallic wiring such as coaxial cable.

Fiber-to-the-Home

FTTH is the ultimate form of fiber access, as it brings the fiber connection directly from the carrier to the individual residence (Figure 7). FTTH has received attention in the technology press in the last year due to the development of PONs, which reduce the cost by effectively sharing one fiber connection among multiple homes.

Figure 7: FTTH Network Architecture

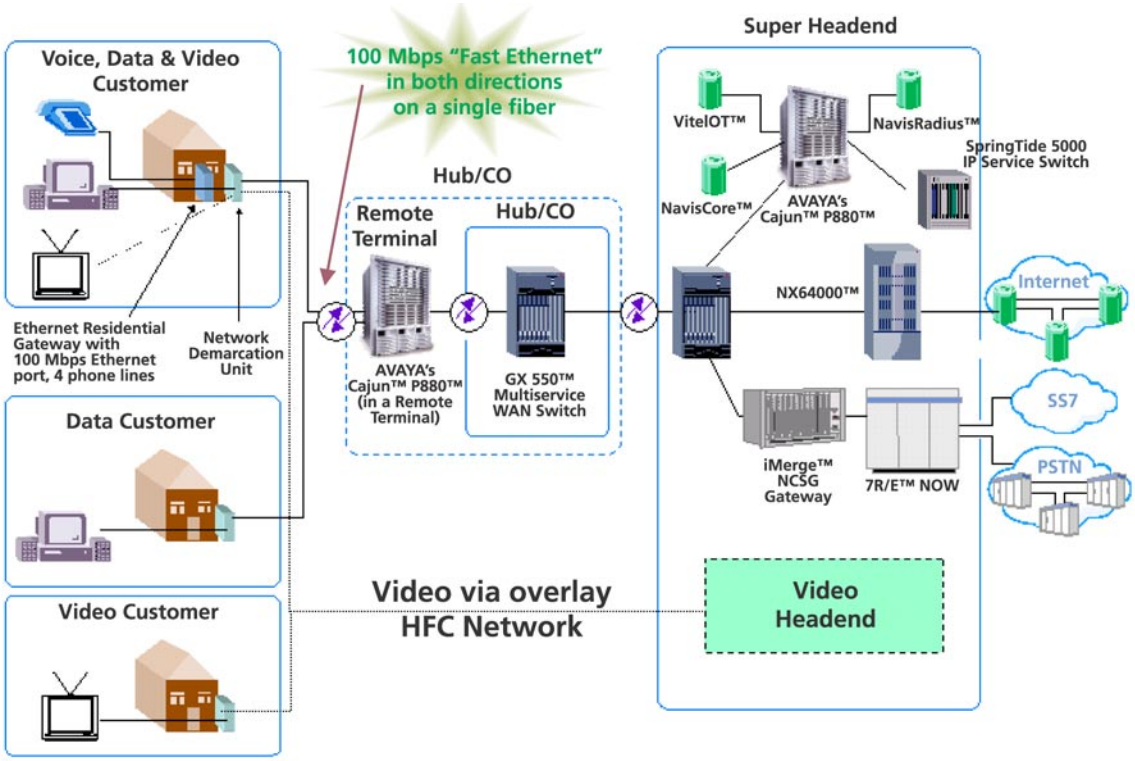

Fixed Wireless

Fixed wireless offers several advantages to competitive providers as they build networks and seek to attract customers. Compared to fiber and other access methods, wireless access has lower cost to access a building and portable and relatively inexpensive CPE. A fiber access loop to a building can cost $100,000 to $300,000, while wireless access solutions between metro buildings can cost $20,000 to $50,000. While there are technology limitations to wireless access, including range and maximum bandwidth, this is still a cost-effective way for a competitive carrier to quickly access a building's customers without relying on the RBOC or waiting for the rollout of fiber. Additionally, the necessary equipment for the client building has the added advantage of being portable; if the provider's marketing and sales efforts in a particular building prove unsuccessful, the equipment can be placed in a new location. This helps to limit sunk costs and adds to the overall economic efficiency of the provider. A wireless access network is also scalable, allowing for additional transmitters to be provisioned if the bandwidth needs within a building grow beyond existing capacity.

There are numbers of different wireless access technologies available today to deploy but this paper will only discuss Local Multipoint Distribution System and Multichannel Multipoint Distribution System.

Figure 8: Fixed Wireless Network Architecture

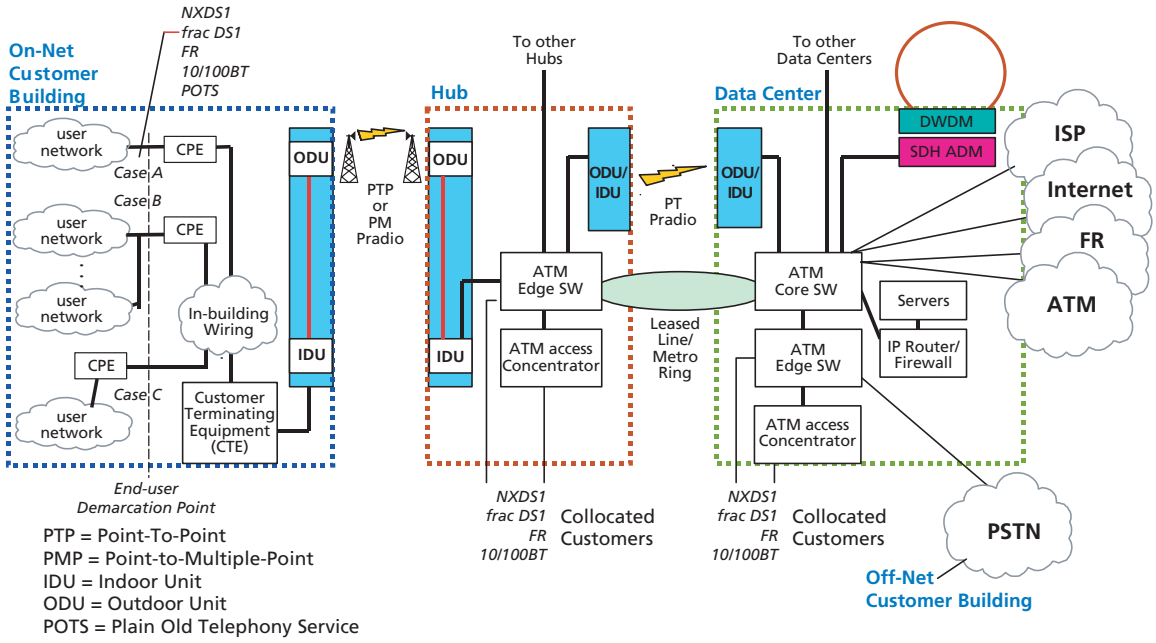

Local Multipoint Distribution System

Local Multipoint Distribution Services (LMDS) is a fixed broadband, wireless access system that uses a range of frequencies around 28-31 GHz. This service allows for two-way digital communications for voice, video, and high-speed data communication. There are two blocks of spectrum – A and B blocks – which differ by the amount and location of spectrum. The A block spectrum is a total of 1150 MHz as compared to the B block at 150 MHz.

The bandwidth of the A block of LMDS is more than twice the total bandwidth of AM/FM radio, VHF/UHF TV, and cellular telephone combined. Using LMDS, transmission speeds of several gigabits per second are possible along line-of-sight distances of several miles.

LMDS, as a licensed spectrum, has distinct advantages over unlicensed systems as it is much less susceptible to interference and offers far greater bandwidth. LMDS may be deployed in point-to-multipoint (PMP) or point-to-point (PTP) configurations. PMP uses a central "hub" connected to the backbone network that feeds numerous "remote" locations within range of that cell. LMDS PMP systems typically have a range of several miles. A PTP system connects 2 locations and can operate over a longer distance, up to 10 to 12 miles. The wireless connections simply replace a segment of wireline in a network. Even in the most comprehensive wireless network, a tap into the wired network occurs somewhere. The short range of LMDS makes it ideal for giving dense coverage to an area. With proper planning and implementing "frequency reuse," the spectrum may essentially be split, allowing channels to be reused over and over in noncontiguous areas.

LMDS does have a number of challenges. It requires line-of-sight between a transmitter and receiver. That is, there must be no obstructions between hub and remote. This requires careful planning and may demand a repeater to retransmit the signal over a building, hilltop, or other obstacle. In addition, LMDS signal strength is greatly reduced by the presence of moisture (rain

fade). In very heavy rainfalls (several inches per hour), the signal may even drop altogether. Though these outages are uncommon and typically brief, they can make the service inappropriate for some critical applications.

LMDS systems are relatively simple and quick to install once the initial planning and layout is complete. They provide an extremely fast and cost-effective means to set up new communications links for customers. They also alleviate the problems associated with obtaining rights-of-way, as well as the high expense of laying fiber or cable.

Multichannel Multipoint Distribution System

Multichannel Multipoint Distribution Service (MMDS), often referred to as "wireless cable," is a unique wireless technology for delivering high-speed Internet access. Its increased use stems from the Telecommunications Act of 1996, which sought to increase choice and competition in all aspects of telecommunications. The deployment of a nationwide MMDS system will provide a choice to many Americans whose options for high-speed Internet access are limited to DSL or cable.

MMDS frequencies, located in the 2.1 GHz and 2.5 - 2.7 GHz bands, are ideally suited for the delivery of broadband access for data, voice, and Internet service. The channels allocated to MMDS have traditionally been used to provide a multichannel video programming service that is similar to cable television. Like broadcast television, MMDS is transmitted from a tower, usually located on a mountain or tall building, to special antennae affixed to residences or businesses throughout a market.

MMDS technology is undergoing rapid changes, however. In September 1998, the FCC announced new rules that allow two-way service via MMDS frequencies. As a result, MMDS will be able to meet the surging demand for high-speed data services.

MMDS technology is not without certain limitations. Presently, MMDS requires a direct line-of-sight between transmitting and receiving antennae. This means more transmitters and antennae will be needed to overcome buildings and terrain obstructions. Other limitations are multipath distortion and distance.

MMDS's large radius means that, in theory at least, one transmit-and-receive station is all a service provider would need to cover an area with a 35-mile radius. In reality, however, to achieve the high capacity needed to serve dense markets, several cellular sites would have to be installed within that area, allowing frequencies to be reused. Even when an area needs multiple cell sites, it is often more economical than laying traditional coax, fiber, or copper lines.

Still, MMDS is a cost-effective and inexpensive point of entry into service for high-speed Internet access when compared to cable or DSL. Moreover, new technology should alleviate the line-of-sight and multipath distortion limitations, making MMDS even more desirable. Although other wireless technologies are vulnerable to weather, MMDS is relatively immune to rain fade.

Summary

There are several different technologies service providers can deploy to bring next-generation communications services to market. Which technology they choose depends primarily on investment in existing infrastructure and their target market(s).

Cable and HFC technologies are evolving to the point where they can and will become as robust, reliable, and manageable as telecom networks. Furthermore, cable networks are attractive because they are able to support a full suite of digital convergence services (data, voice, and video) with a potential capacity of as much as Gbps to the subscriber. In addition, landline HFC is the only infrastructure technology that is able to simultaneously support legacy analog video services as well as fully converged digital services.

Even though the use of cable modems in their present forms has been successful, a significant amount of evolution is yet to come in the area of overall full-service residential broadband architectures. Telephony products must be integrated with voice media gateway functions.

Cable and HFC lead the US market for *residential* high-speed access with nearly twice as many subscribers as competing DSL service. The total number of residential subscribers to xDSL services are relatively small compared to Cable/HFC services due to several factors:

1. xDSL is not widely available to residential customers because of technological issues such as local loops being restricted to 18,000 feet
2. Provisioning problems
3. Slow roll-out of services

However, new applications such as voice over DSL (VoDSL) are improving the business case for xDSL substantially. xDSL can become an economical platform for bundled voice and high-speed data services for residential, SOHO, and small-to-mid-sized business (SMB) market.

As wireless cable continues to evolve, MMDS appears to be the only viable competitor to HFC and xDSL for residential, SOHO, and SMB broadband. LMDS is too expensive for residential fixed cellular, and is universally being targeted at the data LEC market, where it serves as a third alternative to ILEC facilities and competitive metro fiber deployment.

PLT and fiber technologies are most appropriate for the business market. In Europe, PLT is more practical and economical because of the higher voltage infrastructure.

Preparation for Next Generation Access

Next-generation broadband access will provide huge business and growth opportunities for those who are properly prepared. Access providers need to plan and prepare now to support the new infrastructures that will be required to offer these high-speed services.

“Always On” high-speed Internet access, enhanced online gaming, personal videoconferencing, online shopping and banking, Virtual Private Network (VPN) telecommuting, and entertainment-on-demand services all require configuration of the access device and the end-user PCs in a way that is standards-based, vendor-independent, and reliable.

Regardless of which last-mile broadband technology a service provider deploys, it will need to modify and extend its infrastructure to encompass new business policies, operational frameworks, networks, and applications to ensure carrier-class service to its end-users and a reliable, scalable, and manageable network.

Lucent Technologies Worldwide Services

Lucent Technologies Worldwide Services specializes in helping service providers quickly leverage the power of communications networking technology to create a competitive advantage in their market. We are a leading provider of multivendor network consulting and software solutions to the top IXCs, ILECs, CLECs, energy and utility companies, and ISPs – helping them reduce their time-to-market and improve their competitive positions with reliable and secure data/IP networking services. Our *ServiceWorks® for Fast Local Access* offering provides an end-to-end solution to help service providers quickly deliver local broadband access to their customers. Our complete portfolio includes business and technology planning, design and implementation, as well as operational solutions to manage the full lifecycle of their network. For further information please visit http://www.lucent.com/businessunit/worldwide.html or contact a Lucent Technologies Sales Representative at 1-888-767-2988 in the U.S. or 1-650-318-1020 outside the U.S.