Lucent Technologies
Bell Labs Innovations

96-Port MultiDSP Module

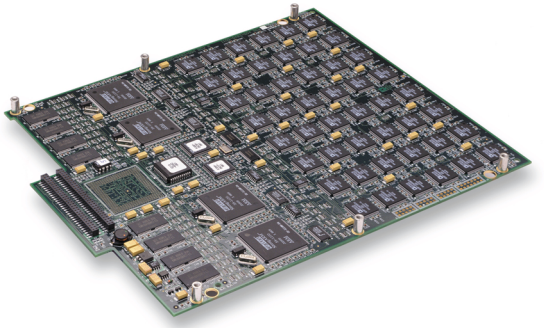

The 96-port MultiDSP module supports a wide range of modem modes as well as the Lucent MultiVoice™ Voice-over-IP (VoIP) Solution at the central site by integrating into the APX 8000™ and MAX TNT® WAN access switches. This highly flexible digital signal processing (DSP) solution allows ordinary telephones to connect to other telephones using a public or private packet network via Lucent VoIP gateways, MultiVoice for the APX 8000 and MAX TNT platforms.

This MultiDSP module is available as a single slot 96-port unit. Its flexibility and powerful performance allow for software upgrades as new features expand services. Its lower power consumption allows it to fit seamlessly into the APX 8000 and MAX TNT switches.

Support for wide range of modem modes and HDLC

The MultiDSP modem supports all standard modem modes for users dialing in on both analog and digital lines. With this technology, analog users can achieve a maximum of 56 Kbps as defined by the V.90 modem standard. Support for error correction and data compression maximizes data transfer integrity and boosts data throughput.

- Support for data modem modes: V.90, K56flex, V.34, V.32bis, V.32, V.22bis, V.22, and below
- Support for ISDN: B-channel high-level data link control (HDLC)
- Error correction and data compression
- Multilink Point-to-Point Protocol (PPP), used for bonding multiple modem or HDLC DS0s

VoIP services integration into APX 8000 and MAX TNT platforms

MultiVoice for the APX 8000 and MAX TNT offers an integrated VolP solution that is high quality, high performance, cost justifiable, scalable, and based on international standards. Service providers, carriers, and enterprises now have an immediate and affordable way to introduce real-time voice communications to traditional IP backbone networks.

- Supports voice compression and packetization
- Each port connects to a single DS0 (voice call)
- Dynamic flexibility for VoIP, fax-over-IP and dial-up digital or analog users

GSM rate adaption offers mobile Internet access

The MultiDSP module's V.110 rate-adaption support provides fast mobile Internet access. It allows Global System for Mobile Communication (GSM) mobile phones, communicating at 9600 bps, to connect to established 64 Kbps Integrated Services Digital Networks (ISDNs). This allows network service providers to support cellular data traffic on the same high-speed E1/PRI trunk lines used for GSM digital cellular service.

- Establishes a connection in only 2-5 seconds
- Also supports users with V.110 terminal adapters

PHS support provides Internet access to mobile phone users

Personal Handyphone System (PHS) mobile phone users can utilize this high-speed data transmission service based on the PHS Internet Access Forum Standards (PIAFS) to access the Internet where land lines are not available or conveniently accessible, such as a customer site or a conference room.

- Wireless data transfer with error correction
- 32 Kbps and 64 Kbps PIAFS data rate standards

V.110 and PHS Solutions

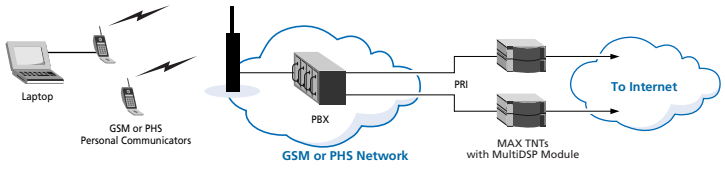

MultiVoice for the MAX TNT VoIP Network

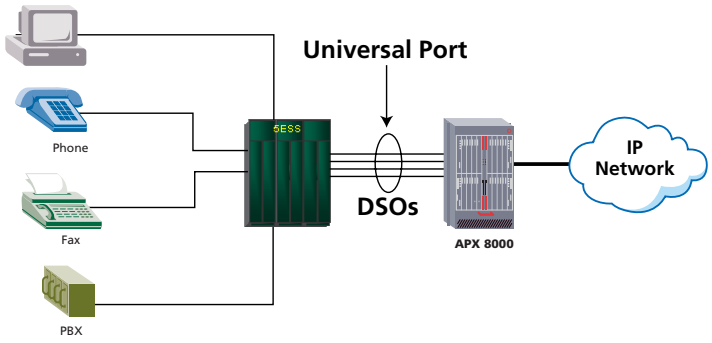

Incoming calls are dynamically supported on any available port. Enables Service Providers to deliver differentiated services more quickly and cost effectively.

Lucent MultiDSP Module Architecture

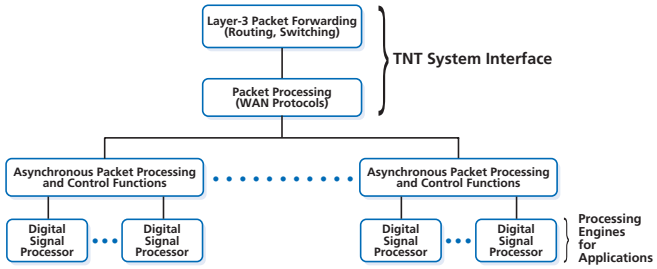

Specifications

Dimensions
Size: 15 in x 0.8 in x 11 in
[38.1 cm x 2 cm x 28 cm]

Power Requirements
40W

Card Weight
~1.5 lb (0.7 kg)

Hot-sSwap Capability
Yes

Environmental
Temperature: 32-104° F (0-40° C)

Relative Humidity: 10-90% (noncondensing)

LED Indicator (per module)
Multipurpose fault indicator

Features

Data Modem Modes
PSTN: ITU-T V.90, K56flex, V.34bis, V.34, V.32bis, V.32, V.22bis, V.22A/B,V.23, and V.21; Bell 212A and 103 ISDN: 64/56 Kbps ISDN BRI B-channel V.92 (future support)

Error Correction
V.42 LAPM and MNP 2-4

Data Compression
V.42bis and MNP5
V.44 (future support)

Fax Modem
14.4 Kbps transfer rate

V.33, V.17, V.29, V.27ter and V.21 channel 2

Group 3, T.30 protocol and Class 1 and 2

Transfer Rate
PSTN: 56 Kbps downstream/31.2 Kbps upstream

ISDN: 64 Kbps

MultiVoice for the APX 8000 and MAX TNT platforms
ITU-T H.323-based gateway

SS7-based voice with the Lucent Softswitch

T.38 real-time fax-over-IP

Transparent modem and fax

Voice codecs supported: G.711, G.729a

Software Upgrade
Via uploadable modem code

Multiprotocol Functionality
IP/IPX, PPP, MP, Multilink Protocol Plus (MP+),

AppleTalk

Authentication
RADIUS, TACACS, TACACS+

Security
PAP, CHAP, Callback, CLID, token card

V.110
Rate adaptive, with default to 9600 bps

PHS
PIAFS 1.0, 2.0, and 2.1; indial

[1]AppleTalk is a trademark of Apple Computer, Inc.

To learn more, contact your Lucent Technologies representative, authorized reseller, or sales agent. Or, visit our Web site. www.lucent.com

Specifications subject to change without notice.

© 2000 Lucent Technologies, Inc.
Printed in the U.S.A.
01/01 • 01-228a

ISO 9001 REGISTERED

Lucent Technologies
Bell Labs Innovations