2.5 Tb/s (64×42.7 Gb/s) Transmission Over 40×100 km NZDSF Using RZ-DPSK Format and All-Raman-Amplified Spans

A. H. Gnauck, G. Raybon, S. Chandrasekhar, J. Leuthold, C. Doerr, and L. Stulz
Lucent Technologies, Bell Laboratories, 791 Holmdel-Keyport Rd, Holmdel, NJ 07733
Tel: 732-888-7197, Fax: 732-888-7074, gnauck@lucent.com

A. Agarwal, S. Banerjee, D. Grosz, S. Hunsche, A. Kung, A. Marhelyuk, D. Maywar, M. Movassaghi, X. Liu, and C. Xu
Lucent Technologies, Bell Laboratories, 101 Crawfords Corner Rd., Holmdel, NJ 07733

X. Wei and D. M. Gill
Lucent Technologies, Bell Laboratories, 600 Mountain Avenue, Murray Hill, NJ 07974

Abstract: We report 2.5 Tb/s (64 × 42.7-Gb/s) WDM transmission over 4000 km (forty 100-km spans) of non-zero dispersion-shifted fiber. This capacity × distance record of 10 petabit-km/s for 40-Gb/s systems is achieved in a single 53-nm extended L band using return-to-zero differential-phase-shift-keyed modulation, balanced detection, and distributed Raman amplification.
©2002 Optical Society of America
OCIS codes: (060.2330) Fiber optics communications; (060.5060) Phase modulation

1. Introduction

Recently, 40-Gb/s wavelength-division-multiplexed (WDM) transmission systems have reached record distances due to such innovations as forward error correction (FEC), distributed Raman amplification, and new transmission fibers. Using 100-km fiber spans, 125-channel transmission over 1200 km has been demonstrated [1], while transmission over 2000 km has been accomplished with 40 channels [2]. These systems employed conventional on-off-keyed (OOK) signals. The return-to-zero differential-phase-shift-keyed (RZ-DPSK) signal format is a promising technique to extend transmission distance. In this format, an optical pulse appears in each bit slot, with the binary data encoded as either a 0 or π phase shift between adjacent bits. The quantum limit for an optically preamplified receiver is 38 photons/bit for on-off-keyed signals [3,4], and 20 photons/bit for differential-phase-shift-keyed signals using balanced detection [4,5]. This improvement translates directly into ~3-dB reduction in the optical signal-to-noise ratio (OSNR) required to achieve a given bit-error rate (BER), thereby increasing system margin. DPSK has also been shown, through numerical simulations and experiment, to reduce the inter-channel cross-phase-modulation (XPM) penalty in 10-Gb/s WDM systems using non-return-to-zero (NRZ) format [6] and RZ format [7]. Similarly, a numerical simulation has suggested that 40-Gb/s WDM systems may benefit from reduced nonlinear effects [8]. However, no amplified spontaneous emission noise was assumed in this simulation, thus neglecting amplitude-to-phase-noise conversion that occurs due to the Kerr nonlinearity [9].

Here we present 40-Gb/s WDM experimental results showing that RZ-DPSK may greatly extend the achievable transmission distance. We transmit 2.5 Tb/s (sixty-four 42.7-Gb/s channels) in a single 53-nm extended L band (100-GHz grid) over forty 100-km spans of non-zero dispersion-shifted fiber (NZDSF). We use RZ-DPSK format, balanced detection, and counter-propagating distributed Raman amplification to achieve a record capacity × distance product of 10 petabit-km/s for 40-Gb/s WDM systems. We also implement FEC and quantify its performance with RZ-DPSK signals in back-to-back and 4000-km measurements.

2. Experiment

The experimental setup is shown in Fig. 1. The sixty-four DFB laser sources operated on a 100-GHz ITU grid, and ranged from 1554.6 to 1607.0 nm. Two 42.7-Gb/s transmitters were used. Each transmitter consisted of 32 laser sources (odd or even channels) operating on a 200-GHz grid, combined in an arrayed-waveguide grating router (AWG), followed by two external $LiNbO_3$ modulators. The modulators were driven in a push-pull configuration to minimize chirp. The first modulator was used to generate a 42.7-GHz, 8-ps RZ pulse train by driving it with a half-bitrate (21.3-GHz) sine wave at twice the switching voltage. The second modulator performed phase modulation and was driven by a 42.7-Gb/s NRZ data stream. The data was generated by electrically multiplexing four copies (relative delays of several nanoseconds) of a 10.664-Gb/s pseudo-random bit stream (PRBS) of length $2^{31} - 1$, thus

emulating 9.953-Gb/s data with 7% FEC overhead. Separately clocked PRBS generators were used for the two transmitters, insuring uncorrelated outputs. For DPSK, the data would normally have to be differentially encoded to accommodate delay-interferometer demodulation at the receiver. However, due to the properties of pseudorandom sequences, this was not necessary until the FEC was implemented. An interleaver with 85-GHz passbands combined the outputs of the two 200-GHz-spaced sets of channels onto a 100-GHz grid with uncorrelated data on adjacent channels. Dispersion precompensation of –650 ps/nm was applied. To probe the maximum penalty from fiber nonlinearities, polarization controllers and a polarizing filter were used to co-polarize all the channels.

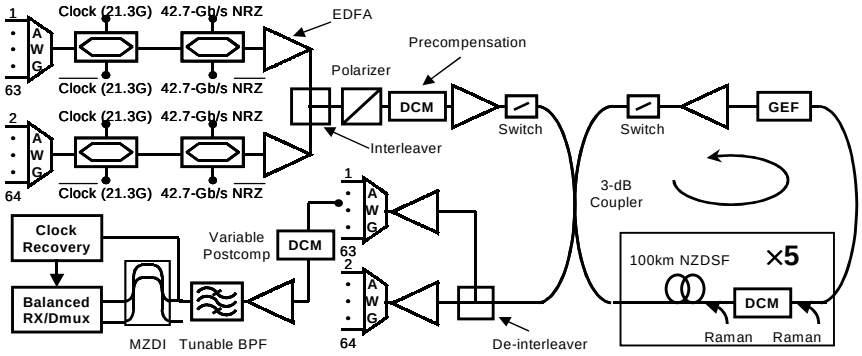

Fig. 1: Experimental Setup

The transmission experiment was performed in a recirculating loop that consisted of five 100-km spans of TrueWave reduced-slope (TW-RS) fiber [10]. Each span included the TW-RS fiber, counter-propagating Raman pumps, and a Raman-pumped dispersion-compensating fiber module (DCM) that boosted the signal before launching into the next span. The measured average dispersion of the TW-RS fibers used in the experiment was 5.8 ps/nm/km at 1580 nm. The average loss of each 100-km span, including the Raman WDM couplers, was ~21.5 dB. Fiber polarization-mode dispersion (PMD) was measured to be 0.04 ps/sqrt(km). The residual dispersion of each 100-km span with DCM ranged from 15 to 35 ps/nm across the 53-nm band. The average launched power per channel was -2 dBm. A programmable gain-equalizing filter (GEF) was inserted in the loop to compensate for the gain slope across the signal channels. After transmission, the two sets of channels were de-interleaved, and each set entered an optical preamplifier. An AWG demultiplexer was then used to extract an individual channel, and the net residual dispersion was brought to ~0 ps/nm using an adjustable dispersion compensator. The signal was then amplified and filtered through a 1.1-nm bandpass filter. An integrated Mach-Zehnder delay interferometer (MZDI) was used to demodulate the RZ-DPSK signal. The differential delay between the two arms was 23.4 ps, the polarization-dependent wavelength shift was less than 500 MHz, and the extinction ratio was greater than 25 dB. A resistive heater on one arm was used to fine-tune the differential phase delay. Maximum power appeared at the "constructive" port when there was no phase change between adjacent bits, and at the "destructive" port when the phase in adjacent bits differed by π. These signals were detected by a balanced pin photodiode circuit and input into a commercial electronic demultiplexer. A 10% optical coupler following the 1.1-nm optical filter provided signal for a high-"Q" clock recovery circuit that was used to clock the demultiplexer. The four 10.7-Gb/s electrical tributaries and clocks were simultaneously available at the output of the demultiplexer. In back-to-back measurements, one output was used, and the four tributaries were scanned by adjusting the phase of the 42.7-GHz recovered clock relative to the data. The performance variation among the tributaries was less than 0.3 dB. In loop operation, the tributaries were randomly sampled each time the loop was refilled and clock was reacquired.

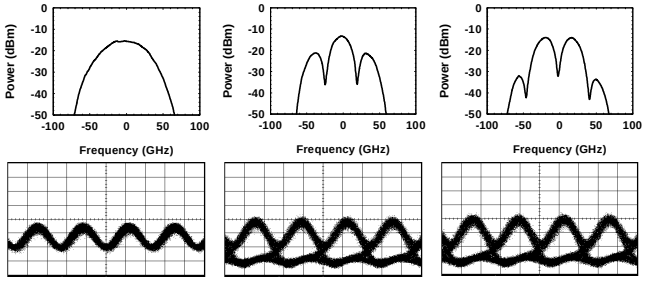

Fig. 2: Single-channel spectra and eye patterns (10 ps/div) for (left) transmitted signal, (middle) constructive port of MZDI, and (right) destructive port of MZDI

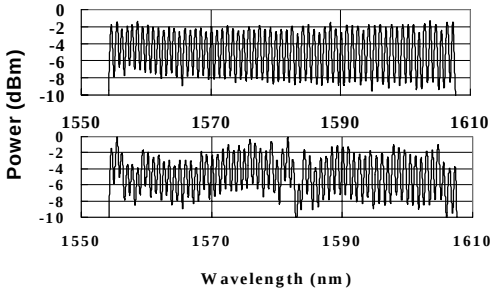

Fig. 3: 64-channel input (top) and 4000-km (bottom) transmission spectra

Figure 2 shows the optical spectrum and eye pattern for a single wavelength at the transmitter, and at the constructive and destructive ports of the MZDI. The eye patterns were obtained using a 32-GHz-bandwidth photodiode that could not resolve the 8-ps optical pulses. Fig. 3 shows the transmitted and received optical spectra for the WDM system. In back-to-back operation, an OSNR of 19 dB (referred to a 0.1-nm noise bandwidth) was required to achieve a BER of 1.0×10^{-9}. Fig. 4 shows the 4000-km transmission performance of the 64 channels at 42.7-Gb/s without FEC. The OSNR of the received channels (triangles), ranged from 15.2 to 20.2 dB at 4000 km. The uncorrected bit-error rates (circles) ranged from 5×10^{-7} to 1.2×10^{-4}.

DPSK noise statistics can differ from those of OOK signals. To assess FEC performance, the bitrate of one PRBS generator was reduced to 9.953 Gb/s, and a commercial 255/238 Reed-Solomon encoder was used to generate a 10.664-Gb/s data stream. This stream was differentially encoded using commercially available logic circuits, and then four copies were electronically multiplexed to 42.7 Gb/s and transmitted as described above. At the receiver, an MZDI with 4-bit differential delay (93.7 ps) was used to demodulate the data, thus differentially decoding the four tributaries simultaneously. After demultiplexing, a recovered tributary was decoded by the FEC board. The corrected versus uncorrected bit-error rates for back-to-back transmission with reduced OSNR are shown in Fig. 5. A corrected BER of less than 1×10^{-12} was obtained for an uncorrected BER of 2.4×10^{-4}, identical to previously measured OOK results. Finally, in 4000-km transmission, we deliberately degraded the performance of one WDM channel by lowering or raising its launched power to obtain errors primarily from noise or nonlinearity, respectively. In either case, the results were indistinguishable from the back-to-back measurement shown in Fig. 5.

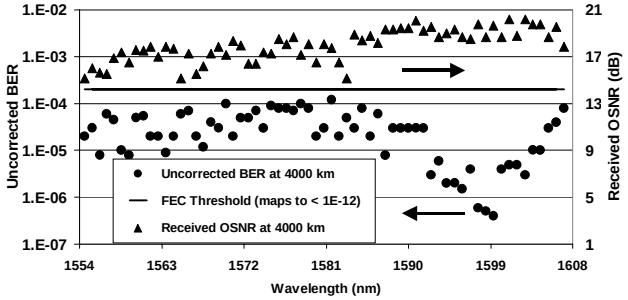

Fig. 4: OSNR (triangles) and uncorrected BER (circles)

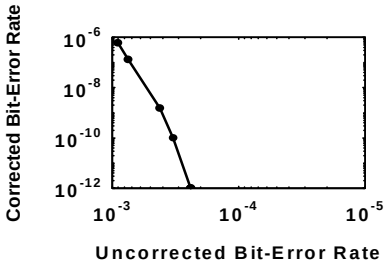

Fig. 5: Corrected vs uncorrected BER for DPSK signal using FEC (back-to-back measurement)

3. Conclusion

We have transmitted 2.5 Tb/s (sixty-four 42.7-Gb/s WDM channels) in a single 53-nm extended L band (100-GHz grid) over 4000 km (forty 100-km spans) of non-zero dispersion-shifted fiber. Previously reported 42.7-Gb/s WDM experiments with 100-km spans reached only 2000 km. A record capacity × distance product of 10 petabit-km/s for 40-Gb/s WDM systems was achieved using RZ-DPSK format, balanced detection, standard Reed-Solomon forward error correction, and distributed Raman amplification.

4. References

1. S. Bigo, W. Idler, J-C Antona, G. Charlet, C. Simonneau, M. Gorlier, M. Molina, S. Borne, C. de Barros, P. Sillard, P. Tran, R. Dischler, W. Poehlmann, P. Nouchi, and Y. Frignac, "Transmission of 125 WDM channels at 42.7Gbit/s (5 Tbit/s capacity) over 12x100 km of TeraLight ultra fibre," in Proceedings of ECOC 2001, postdeadline paper PD.M.1.1 (2001).
2. B. Zhu, L. Leng, L. E. Nelson, S. Knudsen, J. Bromage, D. Peckham, S. Stulz, K. Brar, C. Horn, K. Feder, H. Thiele, and T. Veng, "1.6 Tb/s (40 x 42.7 Gb/s) transmission over 2000 km of fiber with 100-km dispersion-managed spans," in Proceedings of ECOC 2001, postdeadline paper PD.M.1.8 (2001).
3. P. S. Henry, "Error-rate performance of optical amplifiers," in Proceedings of OFC 1989, Paper THK3 (1989).
4. P. A. Humblet and M. Azizoglu, "On the bit error rate of lightwave systems with optical amplifiers," IEEE Journal of Lightwave Technology **9**, 1576-1582 (1991).
5. S. R. Chinn, D. M. Boroson, and J. C. Livas, "Sensitivity of optically preamplified DPSK receivers with Fabry-Perot Filters," IEEE Journal of Lightwave Technology **14**, 370-376 (1996).
6. M. Rohde, C. Casper, N. Heimes, M. Konitzer, E.-J. Bachus, and N. Hanik, "Robustness of DPSK direct detection transmission format in standard fibre WDM systems," Electronics Letters **36**, 1483-1484 (2001).
7. T. Miyano, M. Fukutoku, K. Hattori, and H. Ono, "Suppression of degradation induced by SPM/XPM+GVD in WDM transmission using a bit-synchronous intensity modulated DPSK signal," in Proceedings of OECC 2000, paper 14D3-3 (2000).
8. O. Vassilieva, T. Hoshida, S. Choudhary, G. Castanon, H. Kuwahara, T. Terahara, and H. Onaka, "Numerical comparison of NRZ, CS-RZ and IM-DPSK formats in 43Gbit/s WDM transmission," in Proceedings of LEOS 14th Annual Meeting, 673-674 (2001).
9. J. P. Gordon and L. F. Mollenauer, "Phase noise in photonic communications systems using linear amplifiers," Optics Letters **15**, 1351-1353 (1990).
10. D. F. Grosz, A. Kung, D. N. Maywar, L. Altman, M. Movassaghi, H. C. Lin, D. A. Fishman, and T. H. Wood, "Demonstration of all-Raman ultra-wide-band transmission of 1.28 Tb/s (128 ×10Gb/s) over 4000 km of NZ-DSF with large BER margins," in Proceedings of ECOC 2001, postdeadline paper PD.B.1.3 (2001).