OptiStar® EdgeSwitch



Break through distance and internetworking limitations.

Supports storage networking applications and services over virtually any type of MAN/ WAN network.

Benefits

- Extends your storage networking applications over longer distances
- Helps enable availability and protection of valuable corporate data assets
- Provides flexibility and certified interoperability
- Supports multifaceted growth and scalability
- Leverages existing network investments and infrastructure

Lucent Technologies
Bell Labs Innovations

Extends your storage network applications

The Lucent Technologies OptiStar® EdgeSwitch breaks through the distance and internetworking limitations of the predominant protocol used for storage networking. It is an optical IP and storage router that can enable storage networking applications and services over a wide variety of MAN and WAN architectures including IP, Ethernet, SONET, SDH, DWDM, and dark fiber.

Lucent end-to-end storage networking solutions include integrated Fibre Channel (FC) switching, Fibre Channel Over IP (FCIP) encapsulation, IP switching and routing, and optical interconnectivity, along with transport from data center to metro to core and back again. By employing FCIP, the OptiStar® EdgeSwitch can interconnect isolated FC SANs over regional networks and long distance backbones. This can enable applications such as business continuity and disaster recover, site-to-site data replication, remote data backup, and off-site storage outsourcing.

Protects your data assets

OptiStar® EdgeSwitch can add value to your business in many ways. It can help:

- increase business continuity and availability
- protect your mission-critical and hosted-customer data assets
- scale storage resources across multiple sites
- improve optical network infrastructure utilization
- increase your margins by allowing you to offer new high-value storage services

And, OptiStar® EdgeSwitch helps you reach more remote storage sites over longer distances with lower data center costs. You can use it to take advantage of storage outsourcing opportunities, ranging from remote backups for disaster recovery purposes to full off-site outsourcing of all data storage.

Delivers high performance storage over distance

OptiStar® EdgeSwitch uses FCIP technology to transparently extend SAN applications over distances up to thousands of kilometers. It leverages FC for high performance storage networking, and IP for ubiquitous MAN/WAN transport. OptiStar® EdgeSwitch uses hardware-based FCIP encapsulation and intelligent FC flow control over the WAN. This provides low latency and helps regulate traffic flow according to MAN/WAN bandwidth availability, yielding high application performance.

Provides flexibility and certified interoperability

Industry-leading storage networking vendors have certified OptiStar® EdgeSwitch solutions, providing assurance of solution interoperability, application integrity, and readiness for real-world environments.

A wide range of optical MAN/WAN interfaces, including Packet over SONET/SDH (POS) options and Gigabit Ethernet (GbE) are supported. This flexibility enables it to interoperate with a broad suite of DWDM platforms, SONET/SDH multiplexers, IP routers and a variety of MAN/WAN architectures without the expense of a separate optical edge router.

OptiStar® EdgeSwitch transports IP/GbE LAN and Network-Attached Storage (NAS) traffic through its flexible GbE network module connections. This can allow you to integrate storage networking and data networking environments within one edge device, resulting in lower hardware and management costs. Plus, you can transport both FC and native IP traffic over a shared high-capacity WAN link.



With its modular architecture, OptiStar® EdgeSwitch offers a wide variety of interfaces and flexible configuration options.

Supports multifaceted growth and scalability

The modular architecture of OptiStar® EdgeSwitch accepts multiple line card options, allowing you to scale transport backbones from 100Mbps (or lower) up to 2.5Gbps as your capacity needs grow. Our exclusive, patent-pending flow control technology can provide scalable and high performance reach for storage applications ranging from intra-campus to inter-continental distances. Integrated IP routing functionality facilitates internetworking additional remote facilities, as they are needed.

Leverages existing network investments and infrastructure

OptiStar® EdgeSwitch offers broad interoperability and connection options to SAN, LAN, and MAN/WAN that can leverage existing network investments and infrastructures. It helps simplify and flatten your network architecture by collapsing multiple networking functions and technologies into a single platform at the data center edge. Combining the functionality of multiple IP and FC networking devices, it provides hardware and operating cost-saving opportunities while interconnecting geographically separated data centers.

Our innovative Domain Virtualization™ technology helps make the most of your existing SAN infrastructure through selective segregation and/or sharing of fabrics and devices, both in and between data centers. This can help provide access control and security for your SAN resources, and protection from potentially disruptive control traffic or faults that may occur across the WAN.

Offers failure protection

OptiStar® EdgeSwitch bridges between FC and IP routing domains, allowing you to use standard SAN techniques for building redundancy and availability into your extended SAN fabric. This helps you route around potential hardware failures for high availability and a reduction in service disruptions. As an added defense against service disruption, the OptiStar® EdgeSwitch provides dual redundant AC power supplies, N+1 cooling, automatic failover, dual firmware images, and configuration backup/restore via FTP.

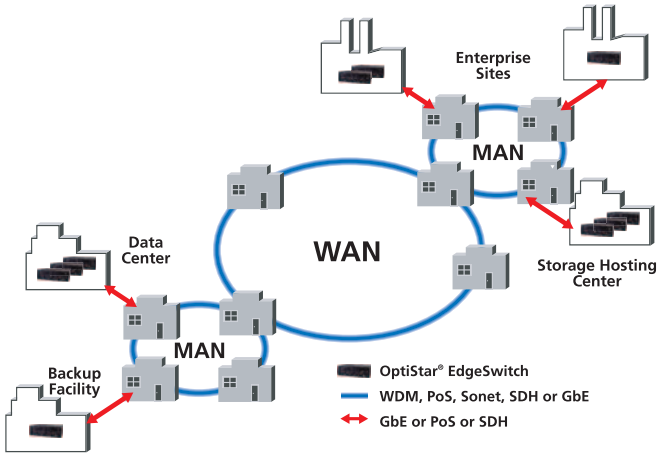

The OptiStar® EdgeSwitch can extend inter-site FC storage and GbE data networking applications over high performance MAN/WAN networks.

Global service team

Lucent Worldwide Services offers professional, rapid deployment to help you get new services to market quickly. Our services solutions include all of the support you need to plan, test, deploy, operate, and maintain your investment. Our worldwide team of network engineers and consultants has experience and expertise that can help reduce your risks and increase your margin.

Extend your capabilities to the edge

Your customers are demanding more data storage and increased data protection and availability. The OptiStar® EdgeSwitch delivers. It can extend storage networking applications over greater distances, while leveraging existing SAN infrastructure. Flexibility and certified interoperability help it enhance the availability and protection of your valuable data assets. OptiStar® EdgeSwitch offers you a solution to integrate multiple WAN interface options, complete IP and FC switching and routing, FCIP technology, Lucent flow control, and sophisticated SAN fabric intelligence —
all in a single platform.

Features

- Flexible WAN connectivity options including GbE, OC-3/STM-1c, OC-12c/STM-4c, and OC-48c/STM-16c
- Connects to DWDM systems, SONET/SDH multiplexers, core and edge IP routers, and Ethernet switches, as well as FC switches, directors, hubs, host bus adapters, and storage systems
- Supports key IP and FC routing protocols including OSPF, BGP4, RIP/RIP2, and FSPF
- Includes integrated FC fabric switching with support for E_Port (switch), F_Port (fabric) and FL_Port (loop) interfaces
- Innovative, patent-pending flow control regulates FC traffic flow for reliable and high performance transport over the WAN
- Offers Domain Virtualization™ technology for advanced administration, scalability, and security for extended SANs
- Routes around potential hardware failures for high availability and reduction in service disruption
- Modular architecture with hot-swappable line cards, optical interfaces, power and fan modules
- Certifications: UL™, FCC, CSA®, CE, VCCI

To learn more about our comprehensive portfolio, please contact your Lucent Technologies Sales Representative or call +800 11223333 (Europe wide Freephone) or +32 70 22 20 52.

Visit our web site at http://www.lucent.com.

This document is for planning purposes only, and is not intended to modify or supplement any Lucent Technologies specifications or warranties relating to these products or services. The publication of information in this document does not imply freedom from patent or other protective rights of Lucent Technologies or others.

Copyright © 2003
Lucent Technologies Inc.
All rights reserved

ONG v4.0303

OptiStar is a registered trademark of Lucent Technologies Inc.

Domain Virtualization is a trademark of Lucent Technologies Inc.

UL is a registered trademark of Underwriter's Laboratories Inc.

CSA is a registered trademark of Canadian Standards Association

Lucent Technologies
Bell Labs Innovations

