5.12 Tb/s (128 x 42.7 Gb/s) Transmission with 0.8 bit/s/Hz Spectral Efficiency over 1280 km of Standard Single-Mode Fiber Using All-Raman Amplification and Strong Signal Filtering

D. F. Grosz (1), A. Agarwal (1), S. Banerjee (1), A. P. Küng (1), D. N. Maywar (1), A. Gurevich (1), T. H. Wood (1), C. R. Lima (2), B. Faer (2), J. Black (2), C. Hwu (2)
1 : Bell Labs - Lucent Technologies, 101 Crawfords Corner Rd., Holmdel, NJ, 07733 USA
Tel: 1 732 949 5793, Fax: 1 732 949 9363, E-mail: grosz@lucent.com
2 : Sprint Advanced Technology Labs, 30 Adrian Court, Burlingame, CA 94010 USA

Abstract: *All-Raman transmission of 128 x 42.7 Gb/s at 50 GHz channel spacing over 1280 km of Standard Single-Mode Fiber is demonstrated. This record capacity for this high spectral efficiency is achieved by strong filtering of Carrier-Suppressed Return-to-Zero signals.*

Introduction

Different technological approaches are being pursued to increase the capacity of Dense Wavelength Division Multiplexing (DWDM) optical communication systems. These include high channel counts [1], high bit rates per channel [2], enhancement of the usable transmission bands [3], and combinations of all the aforementioned techniques. Irrespective of the various approaches, the ultimate achievable capacity will be determined by the achieved spectral efficiency, defined as the channel bit rate (B) divided by the channel separation ($\Delta\nu$). Recent published results at 0.8 bits/s/Hz spectral efficiency demonstrate transmission of 80 x 42.7 Gb/s channels up to 900 km by means of polarization interleaving and vestigial side-band transmission [4]. In Ref. [5], 2500 km transmission of 55 x 42.7 Gb/s was demonstrated by means of SPM-based all-optical reshaping and signal bandwidth limiting. At higher per-channel bit-rates, 40 x 80 Gb/s transmission was demonstrated over 1000 km on NZ-DSF [6]. In this paper, we demonstrate a record capacity of 655 Pb/s * km at 0.8 bits/s/Hz spectral efficiency by performing all-Raman single wide-band (53 nm) long-haul transmission of 5.12 Tb/s (128 x 42.7 Gb/s) over 1280 km of commercially available Standard Single Mode Fiber (SSMF). This record capacity at such high spectral efficiency is achieved by means of strong signal filtering of the Carrier Suppressed Return-to-Zero (CS-RZ) signals before and after transmission and polarization interleaving at the transmitter end. The CS-RZ format has the distinct feature of maintaining a pulse-like waveform through strong optical filtering, that leads to better non-linear performance and better receiver sensitivity. The high spectral efficiency was achieved without resorting to more complex techniques such as polarization demultiplexing at the receiver side [7], vestigial side-band transmission and/or detection, and/or spectrally narrower transmission formats [8]. Furthermore, we used electrical multiplexing and demultiplexing of the 42.7 Gb/s data streams and long 2^{31}-1 bit patterns.

Experimental setup

The experimental setup is shown in Fig. 1. The 128 signal lasers are spaced by 50 GHz and grouped into two banks of 64 sources. Each bank is independently modulated with

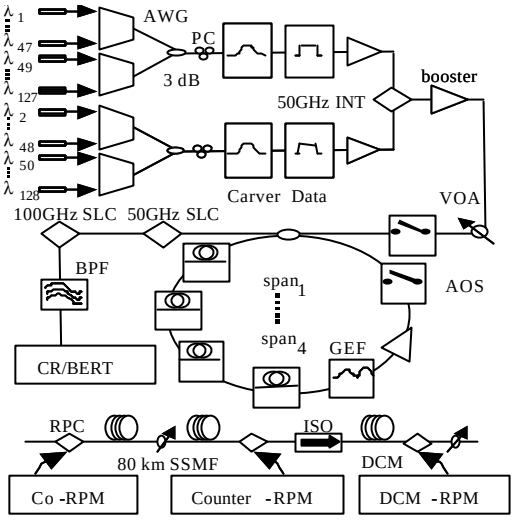

Figure 1: *Experimental Setup. AWG: array waveguide router. INT: interleaver. PBS: polarization beam splitter. AOS: acousto-optic switch. VOA: variable optical attenuator. SLC: slicer. BPF: band-pass filter. CR/BERT: clock recovery/BER measurement. RPC: Raman pump combiner. RPM: Raman-pump module. ISO: optical isolator.*
Lower Block: *typical span*

2^{31}-1 PRBS data; the modulation format of 67% CS-RZ is obtained by pulse carving. Data modulators are driven with electrical NRZ signals at the FEC rate of 42.7 Gb/s. The two banks of channels are then orthogonally polarized and coupled together by a narrow interleaver (50 GHz passband at the 3 dB point) providing a strong pre-filtering of the signal. Channels are then boosted to a per-channel launch power of –4 dBm. To ensure the orthogonality of the launched channels, a polarization beam splitter (PBS) was installed at a power tap of the booster amplifier to monitor the polarization state of both sets of channels. A recirculating loop consisting of four 80 km spans of SSMF plus slope-matching DCMs was used. Each span has approximately 17 dB loss and is both co- and counter-pumped. The total on-off Raman gain is ~ 16 dB, with 4 dB co-gain. Details of the pumping scheme can be found in Ref. [9]. Using this pumping scheme, a flat gain spectrum is achieved (within ~0.9 dB per span) from 1554 nm to 1607 nm, i.e., a single 53 nm extended L-band. To

overcome the remaining span loss, each DCM following the transmission fiber is counter-pumped and the corresponding on-off gain is approximately 12 dB. A Gain Equalization Filter (GEF) follows the last fiber span in the loop, yielding a spectral ripple of 5 dB after 1280 km. Channels are demultiplexed by a narrow 50 to 100 GHz slicer (41 GHz passband at the 3 dB point) providing strong rejection of neighboring channels. This interleaver is followed by a 100 to 200 GHz slicer (75 GHz passband at the 3 dB point), and a tunable 1.1 nm bandpass filter. The clock is recovered from the received data by a high-Q filter. Data are electrically demultiplexed and then the average BER of the four 10 Gb/s tributaries is measured.

The dispersion map is comprised by a pre-compensation of –440 ps/nm (at 1570 nm). In-line DCMs were specially designed to provide the desired level of under-compensation of approximately +30 ps/nm per span. Post-compensation is provided by a tunable compensator that brings the net dispersion of the channel under test close to 0 ps/nm at the end of the line.

Transmission results

The input spectrum to the fiber and the output spectrum after 1280 km (4 turns around the loop) are shown in Fig. 2. A magnified part of the launched spectrum is shown in Fig. 3. The lower portion of Fig. 3 shows a demultiplexed channel (in back-to-back) together with an optical eye (at an OSNR of 25 dB, measured in a 0.1 nm bandwidth.) For 50 GHz channel spacing and strongly filtered channels, 26.5 dB OSNR is required for a BER = 10^{-9}. In our setup, this represents a penalty of ~ 3 dB over the 100 GHz channel spacing case (0.4 bits/s/Hz spectral efficiency.) The received OSNR and BER for all 128 channels are shown in Fig. 4.

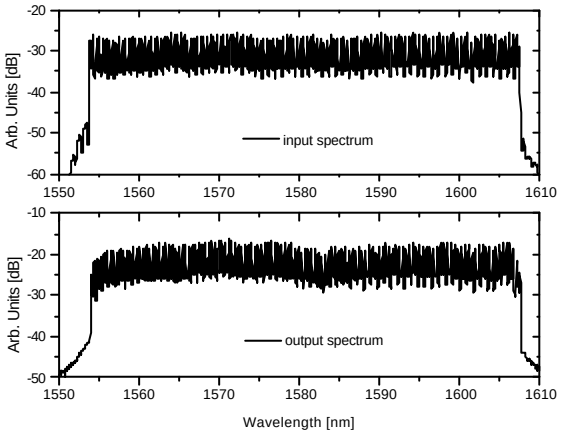

Figure 2*: Input spectrum and output spectrum at 1280 km.*

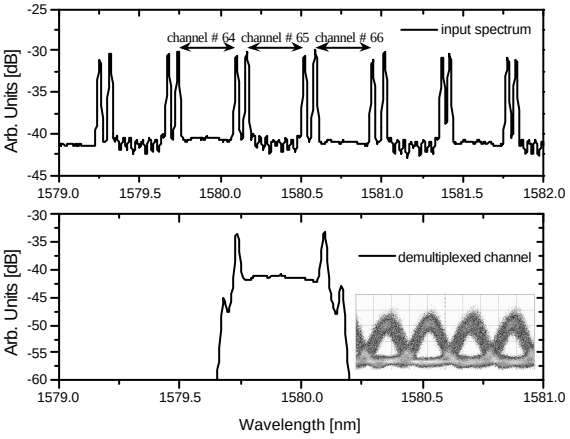

Figure 3: *Magnified region of the input spectrum and the corresponding demultiplexed channel.*
Inset: *back-to-back eye at 25 dB OSNR.*

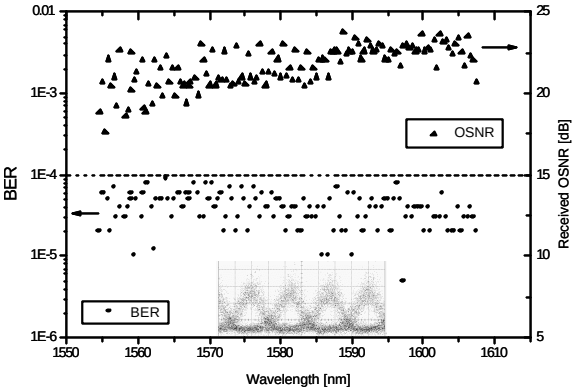

Figure 4: *Measured BER and received OSNR for all 128 channels.*
Inset: *typical received eye pattern.*

Most of the channels, 116 out of 128, have a BER after transmission equal or better than $6*10^{-5}$, that ensures operation at a corrected BER = 10^{-16} or better (by means of standard Reed-Solomon FEC with 7% overhead). The worst channel has a BER = $9*10^{-5}$ that ensures operation at a corrected BER ~ 10^{-14}. Measured transmission penalties (not shown) were small in the range of 0 to 1.5 dB after 1280 km.

Conclusion

We have demonstrated all-Raman single-band transmission of 5.12 Tb/s (128 x 42.7 Gb/s @ 50 GHz) over 1280 km of commercially available SSMF with a spectral efficiency of 0.8 bits/s/Hz for a total capacity of 6.55 Pb/s * km. This record capacity at such high spectral efficiency was achieved by means of strong filtering (pre- and post-) of the CS-RZ signal. Other enabling technologies for this demonstration include all-Raman amplification and wide-band dispersion compensation.

Acknowledgements

We gratefully acknowledge help from A. Leven, B. Zhu, S. Radic, and S. Chandrasekhar.

References

1 J.–X. Cai *et al*, OFC 01, PD20, Anaheim, 2001
2 H. Sugahara *et al*, OFC 02, FC6, Anaheim, 2002
3 D. G. Foursa, *et al*, OFC 02, FC3, Anaheim, 2002
4 G. Charlet, *et al*, OAA 02, PD1-1, Vancouver, 2002
5 N. Yoshikane, *et al*, OAA 02, PD6-1, Vancouver, 2002
6 G. Gupta, *et al*, OFC 02, TuA5, California, 2002
7 T. Ito, *et al*, ECOC 00, PD1.1, Munich, 2000
8 H. Bissessur, *et al*, Electron. Lett., 38, pp. 377-379, 2002
9 D. F. Grosz, *et al*, ECOC 01, PD1.3, Amsterdam, 2001